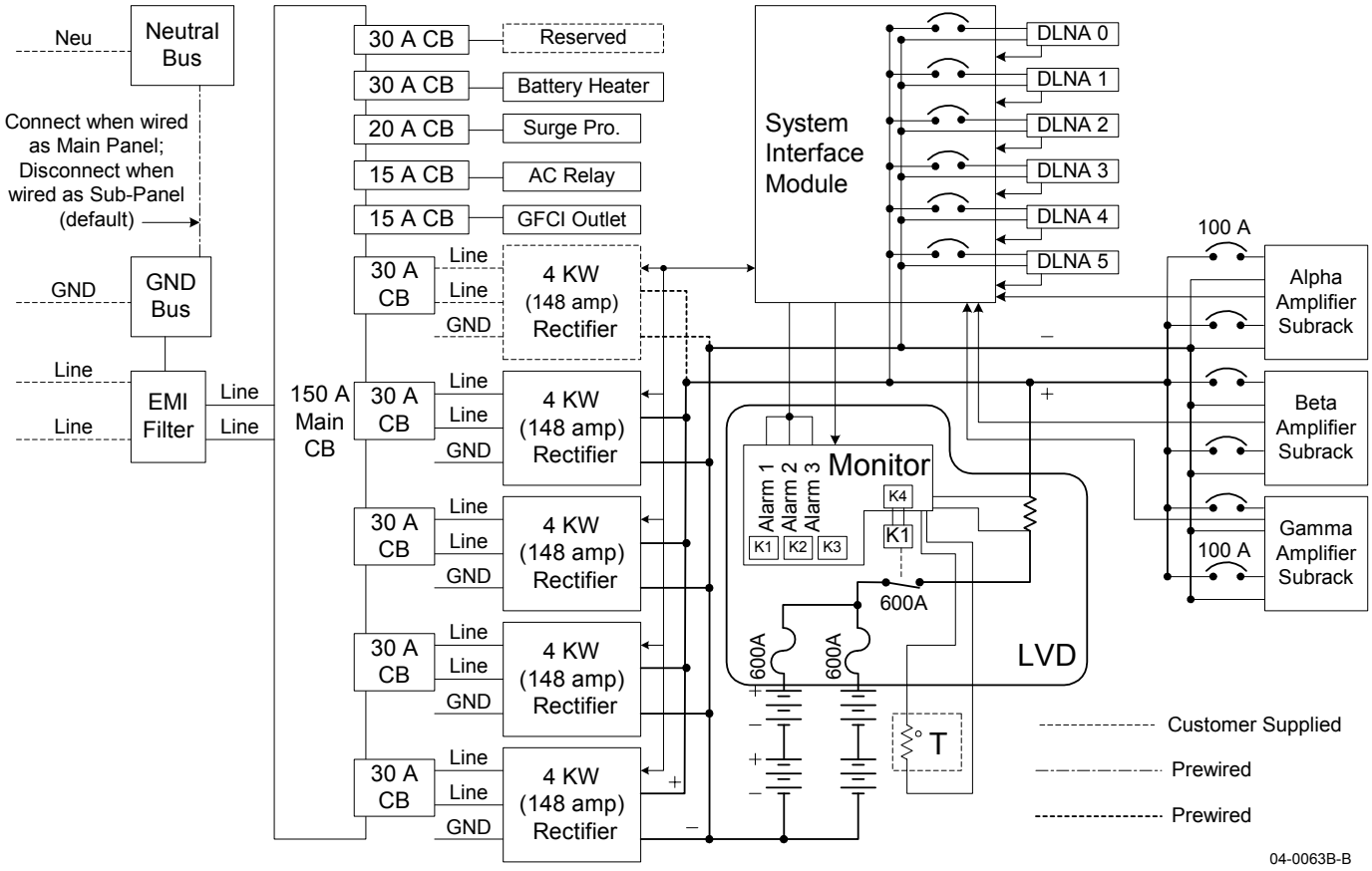
Neu
Neutral Bus
Connect when wired as Main Panel; Disconnect when wired as Sub-Panel (default)
GND
GND Bus
Line
Line
EMI Filter
Line
Line
150 A Main CB
30 A CB
Reserved
30 A CB
Battery Heater
20 A CB
Surge Pro.
15 A CB
AC Relay
15 A CB
GFCI Outlet
30 A CB
Line
Line
GND
4 KW (148 amp) Rectifier
System Interface Module
DLNA 0
DLNA 1
DLNA 2
DLNA 3
DLNA 4
DLNA 5
100 A
Alpha Amplifier Subrack
Beta Amplifier Subrack
Gamma Amplifier Subrack
100 A
Monitor
Alarm 1
Alarm 2
Alarm 3
K1
K2
K3
K4
K1
600A
600A
600A
LVD
T
Customer Supplied
Prewired
Prewired
04-0063B-B