WEBER FIELDS	P/N	MODEL	-	DESC01	FREQ	DESC02	DESC03	DESC12	DESC07	GRAPHIC 1	DESC09	DESC05	DESC11	DESC05	DESC05	DESC04	DESC06	DESC 13	DESC 14
DWG FIELDS	PART NO.	MODEL	STYLE	FREQ CODE	FREQ RANGE (MHz)	IC #	FCC ID	WEEE MARK	CE MARK	C-TICK	KC MARK	KOREAN REG #	COUNTRY OF ORIGIN	CMIIT	JAPAN TELEC	OFTA CERT	PATENT APPLICATION	PAT. NO. 1, 2	PAT. NO. 3, 4
	39A14920	ULXD1	LabelmVer110	G50	470-534	IC:616A-ULXD1 G50	FCC ID:DD4ULXD1G50						MADE BY SHURE IN MEXICO				PAT. APP. PENDING		
	39B14920	ULXD1	LabelmVer110	G51	470-534			YES	0682				MADE BY SHURE IN MEXICO				PAT. APP. PENDING		
	39C14920	ULXD1	LabelmVer110	H51	534-598			YES	0682	N108 Z540			MADE BY SHURE IN MEXICO				PAT. APP. PENDING		
	39D14920	ULXD1	LabelmVer110	J50	572-636	IC:616A-ULXD1 J50	FCC ID:DD4ULXD1J50				KC	KCC # TBD Post Cert	MADE IN MEXICO				PAT. APP. PENDING		
	39E14920	ULXD1	LabelmVer110	K51	606-670			YES	0682				MADE BY SHURE IN MEXICO				PAT. APP. PENDING		
	39F14920	ULXD1	LabelmVer110	L50	632-696	IC:616A-ULXD1 L50	FCC ID:DD4ULXD1L50				KC	KCC # TBD Post Cert	MADE IN MEXICO				PAT. APP. PENDING		
	39G14920	ULXD1	LabelmVer110	L51	632-696				0682	N108 Z540			MADE BY SHURE IN MEXICO	CMIIT# TBD Post Cert			PAT. APP. PENDING		
	39H14920	ULXD1	LabelmVer110	P51	710-782			YES	0682				MADE BY SHURE IN MEXICO	CMIIT# TBD Post Cert			PAT. APP. PENDING		
	39J14920	ULXD1	LabelmVer110	JB	806-810								MADE BY SHURE IN MEXICO		JRF# TBD Post Cert		PAT. APP. PENDING		
	39K14920	ULXD1	LabelmVer110	AB	770-810								MADE BY SHURE IN MEXICO		JRF# TBD Post Cert		PAT. APP. PENDING		
	39L14920	ULXD1	LabelmVer110	Q51	794-806								MADE BY SHURE IN MEXICO				PAT. APP. PENDING		
	39M14920	ULXD1	LabelmVer110	R51	800-810								MADE BY SHURE IN MEXICO				PAT. APP. PENDING		
	39N14920	ULXD1	LabelmVer110	X50	925-932						KC	KCC # TBD Post Cert	MADE IN MEXICO				PAT. APP. PENDING		
	39P14920	ULXD1	LabelmVer110	G52	479-534								MADE BY SHURE IN MEXICO			OFTA# TBD Post Cert	PAT. APP. PENDING		
	39R14920	ULXD1	LabelmVer110	H52	534-565								MADE BY SHURE IN MEXICO			OFTA# TBD Post Cert	PAT. APP. PENDING		

NOTES UNLESS OTHERWISE SPECIFIED:

1. DIMENSIONS INDICATED IN BRACKETS [mm] REPRESENT COMPARABLE METRIC CONVERSION FOR REFERENCE USE
2. FEATURE MARKED ★ / IMPORTANT FOR PROPER FIT/CLEARANCE WITH MATING PART (2 PL)
3. MUST MEET SUPPLIER QUALITY REQUIREMENTS PER LATEST SHURE INCORPORATED INCOMING INSPECTION INSTRUCTIONS
4. MATERIAL: ULTRAPLATE, SILVER PER 28A8291, AND THERMAL TRANSFER RIBBON, BLACK PER 17A665
5. BORDER GRAPHICS TO BE PER SHURE INCORPORATED CAMERA READY ARTWORK CR-2379
6. REGION-SPECIFIC MARKINGS TO BE PRINTED IN AREA INDICATED
7. MODEL NUMBER AND FORMAT NAME TO BE PER APPLICABLE PART NUMBER AS INDICATED IN THE TABLE ABOVE
8. LABELS SHOULD BE REELED IN SUCH A WAY THAT WHEN ROLL IS PULLED, TEXT SHOULD APPEAR AS SHOWN FOR FURTHER PRINTING.
9. LABELS TO BE SUPPLIED ON ROLL WITH PERFORATION BETWEEN LABELS FOR EASE OF TEARING

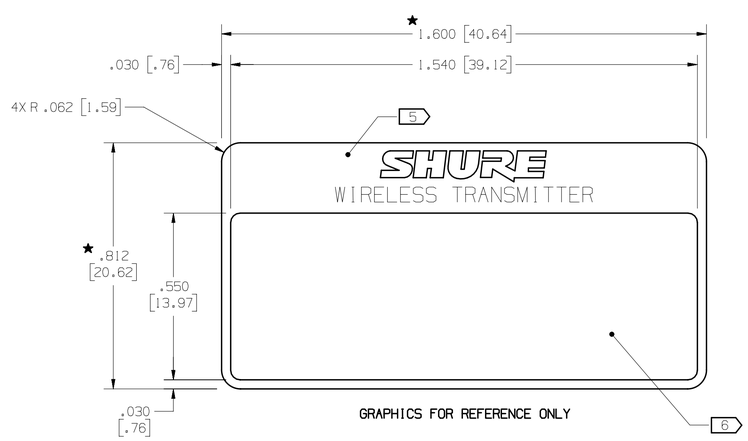

GRAPHICS FOR REFERENCE ONLY

DRAWING NO: 39-14920

REVISION RECORD

REV	ECO / RECORD NUMBER	DESCRIPTION OF CHANGE NAME MM/DD/YYYY	AZ
00		PRELIMINARY RELEASE M COSTER 06/27/2011	
01		DEVELOPMENT RELEASE M COSTER 06/28/2011	
02		COO COLUMN:"MADE BY SHURE IN MEXICO" WAS "ASSEMBLED BY SHURE IN MEXICO" M COSTER 06/30/2011	
03		KOREAN REG #: KCC# WAS KC# CMIIT# WAS SRRC#. ADDED PATENT DESC COLUMNS 13 & 14 M COSTER 07/06/2011	
04		051 FREQ WAS 770-810 M COSTER 08/02/2011	
05		ADDED LABEL STYLE COLUMN. 39D14920, 39F14920, & 39N14920: "MADE IN MEXICO" WAS "MADE BY SHURE IN MEXICO" M COSTER 08/12/2011	A2
06		ADDED "0682" FIELD TO 39G14920 M COSTER 08/17/2011	
07		39J14920 FREQ CODE JB WAS B M COSTER 08/23/2011	

SHURE® 5800 W TOUHY AVENUE
NILES, IL 60714-4608
847-600-2000
SHURE INCORPORATED WWW.SHURE.COM

CONFIDENTIAL
©2011 SHURE INCORPORATED

3RD ANGLE

DRN: M COSTER 06/27/2011
CHK: X XXX MM/DD/YYYY
APP: X XXX MM/DD/YYYY
FIRST USED IN: ULXD1

NOTES: · NX CAD MODEL - DO NOT SCALE
· MUST CONFORM TO ENVIRONMENTAL COMPLIANCE SPEC · 6A278
· ALL DIMENSIONS IN INCHES UNLESS OTHERWISE SPECIFIED

TOL: 2 PL ± N/A
3 PL ± .010
∠ ± N/A

NOTICE
THIS DRAWING IS THE PROPERTY OF SHURE INCORPORATED AND IS DISCLOSED TO YOU IN STRICT CONFIDENCE AND WITH THE UNDERSTANDING THAT IT IS NOT TO BE REPRODUCED, COPIED, OR USED EXCEPT FOR THE PURPOSE OF PRODUCING TOOLS OR PRODUCTS EXCLUSIVELY FOR SHURE INCORPORATED. COPIES OF THIS DRAWING ARE TO BE MADE ONLY WHEN NECESSARY FOR THE PURPOSE STATED ABOVE AND ALL COPIES MUST CONTAIN THIS NOTICE. THIS DRAWING AND ALL COPIES MUST BE RETURNED ON REQUEST.

DESCRIPTION: NAMEPLATE, FREQUENCY

MATL: NOTE 4
FINISH: N/A

DWG NO: 39-14920
REV 07
SIZE D

PROJ: 17683
SCALE: 4 : 1
SHEET: 1 OF 1