Appendix 3

Circuit Diagrams

Drawing Number	Description
101.6263	**RU RF Board (7 sheets) comprising:** RU RF Board Telemetry Receiver Cartesian Feedback Loop Telemetry Transmitter: Synthesizer Telemetry Transceiver Receiver Section Telemetry Transceiver Power Amp & Antenna Interface Telemetry Transceiver IO Telemetry Transceiver Power Supplies
101.6273	**Schematic, Baseband Board, RU (6sheets)**

RU RF BOARD

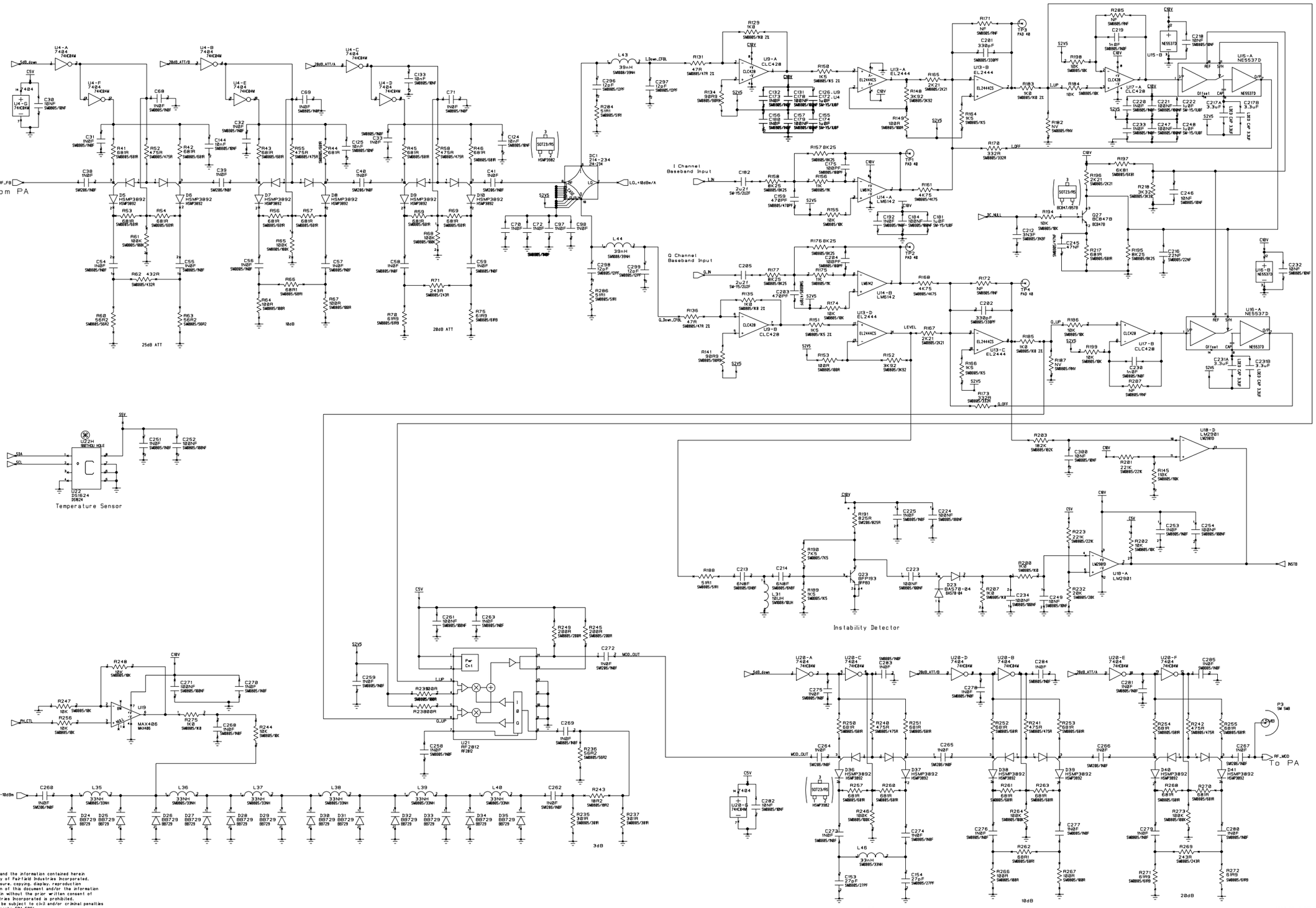

This document and the information contained herein is the property of Fairfield Industries Incorporated. Any use, disclosure, copying, display, reproduction or dissemination of this document and/or the information contained herein without the prior written consent of Fairfield Industries Incorporated is prohibited. Infringers may be subject to civil and/or criminal penalties (17 U.S.C. paragraphs 504-506).

PRINT SCALE 287.658

DRAWN	COPYRIGHT Copyright 1998 Fairfield Industries Incorporated. All Rights Reserved.	SHEET DESCRIPTION:
DATE	NOTES--	Telemetry Transceiver Cartesian Feedback Loop
CHECKED		
DATE		

ISSUE	DATE	DESCRIPTION

CIRCUIT DIAGRAM FOR:- FAIRFIELD TELEMETRY TRANSCEIVER

DRAWING NUMBER 181.6263 REV A

SHT. 2 OF 7

FAIRFIELD INDUSTRIES INCORPORATED

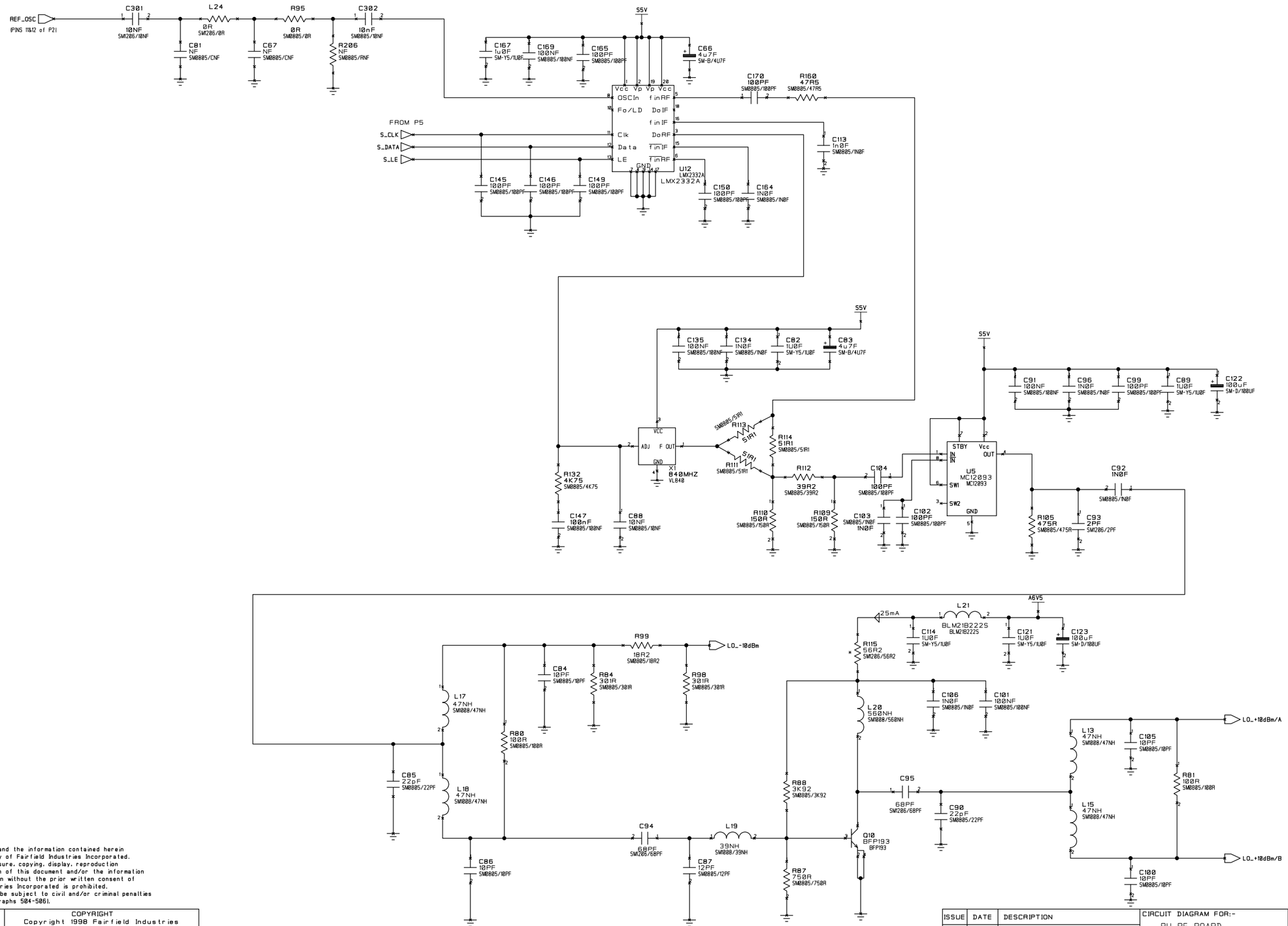

This document and the information contained herein is the property of Fairfield Industries Incorporated. Any use, disclosure, copying, display, reproduction or dissemination of this document and/or the information contained herein without the prior written consent of Fairfield Industries Incorporated is prohibited. Infringers may be subject to civil and/or criminal penalties (17 U.S.C. paragraphs 504-506).

PRINT SCALE 405:650

DRAWN	COPYRIGHT Copyright 1998 Fairfield Industries Incorporated: All Rights Reserved.	ISSUE / DATE / DESCRIPTION	CIRCUIT DIAGRAM FOR:- RU RF BOARD
DATE			DRAWING NUMBER 101.6263 REV A
CHECKED	NOTES:-		SHT. 3 OF 7
DATE			FAIRFIELD INDUSTRIES INCORPORATED

SHEET DESCRIPTION:

Telemetry TX: Synthesizer

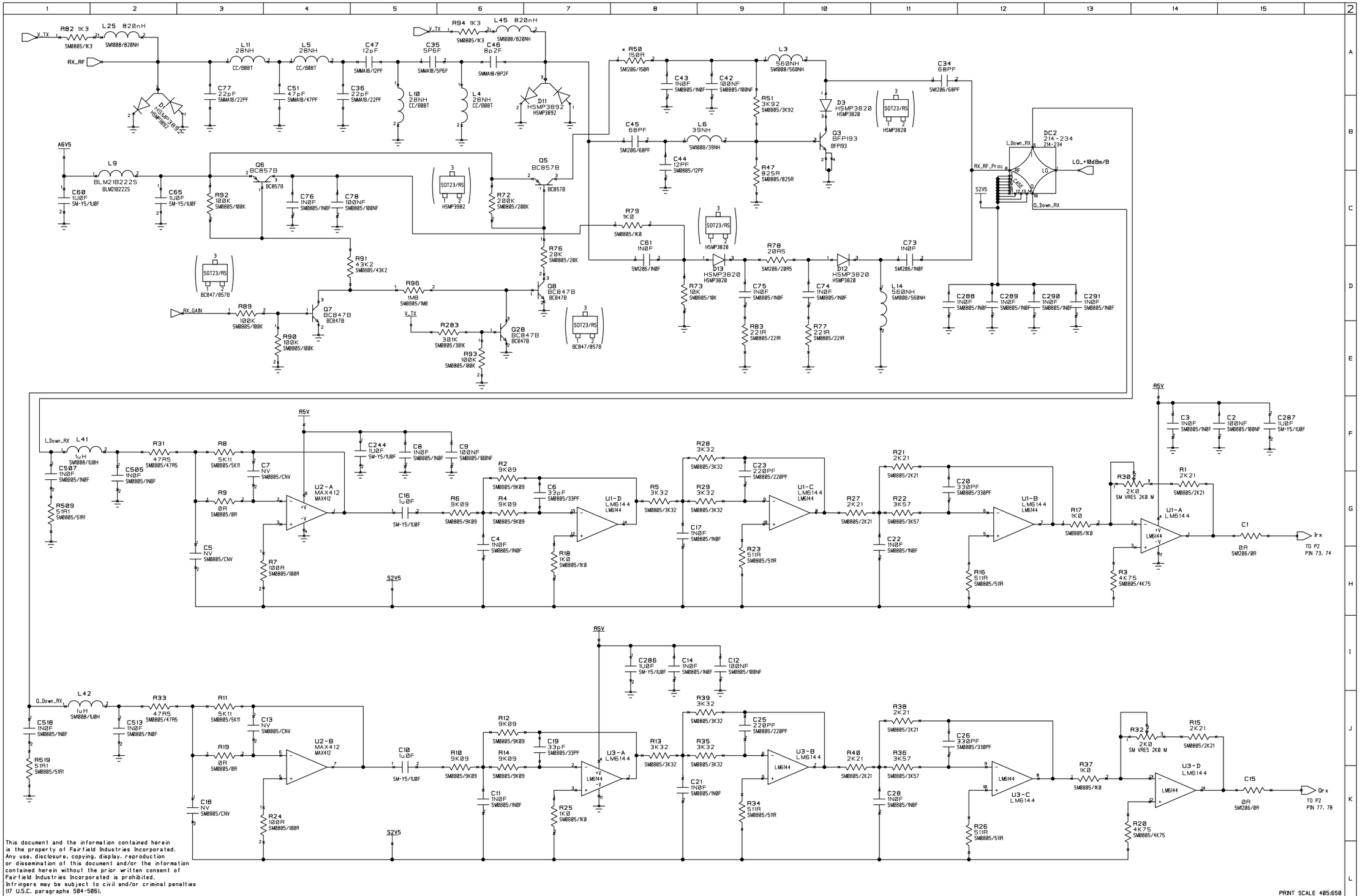

This document and the information contained herein is the property of Fairfield Industries Incorporated. Any use, disclosure, copying, display, reproduction or dissemination of this document and/or the information contained herein without the prior written consent of Fairfield Industries Incorporated is prohibited. Infringers may be subject to civil and/or criminal penalties (17 U.S.C. paragraphs 504-506).

PRINT SCALE 405:650

DRAWN	COPYRIGHT Copyright 1998 Fairfield Industries Incorporated; All Rights Reserved.	ISSUE / DATE / DESCRIPTION	CIRCUIT DIAGRAM FOR:- RU RF BOARD
DATE	NOTES:-		DRAWING NUMBER 101.6263 REV A
CHECKED	SHEET DESCRIPTION: Telemetry Transceiver Receiver Section		SHT. 4 OF 7
DATE			FAIRFIELD INDUSTRIES INCORPORATED

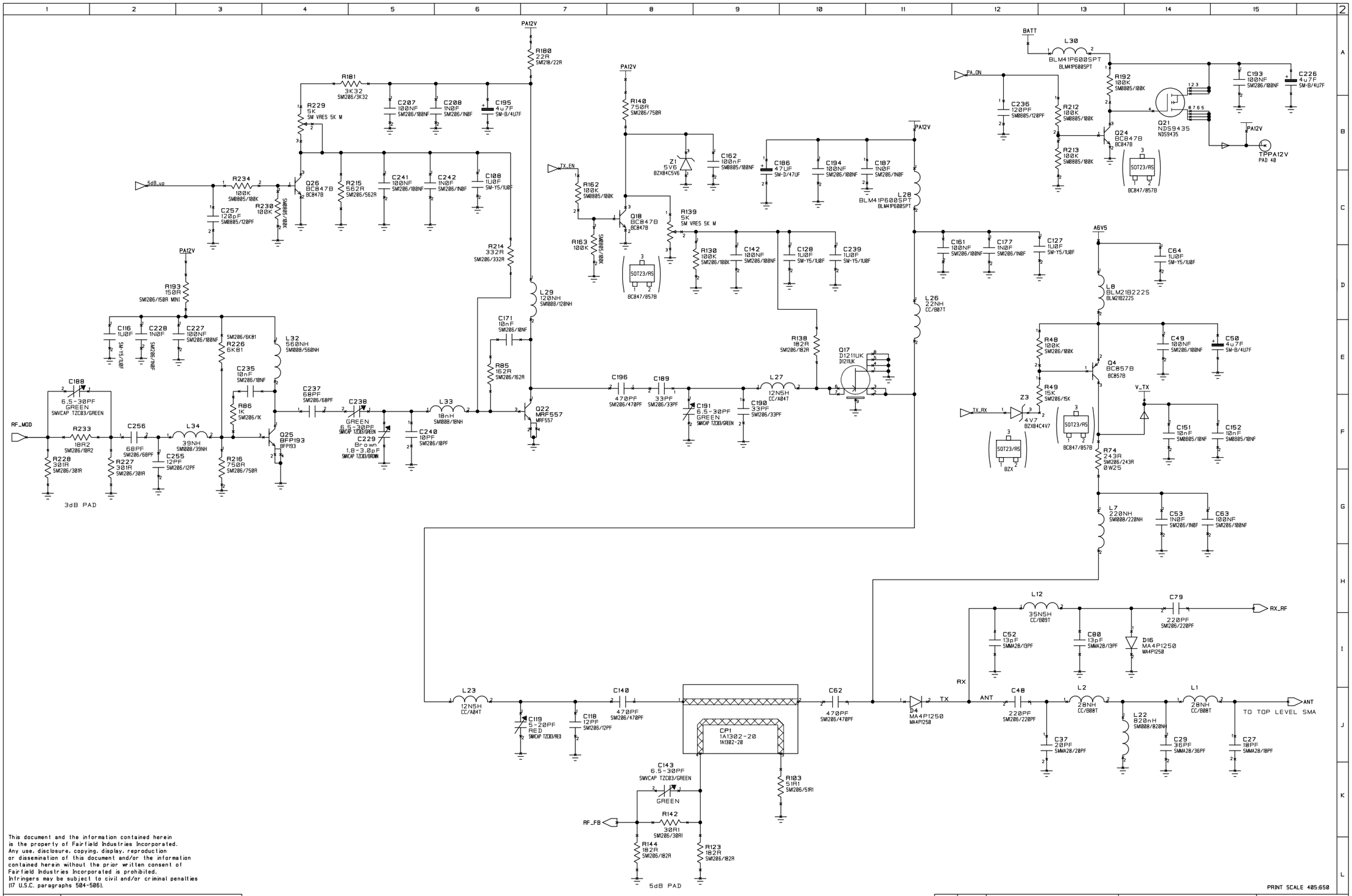

This document and the information contained herein is the property of Fairfield Industries Incorporated. Any use, disclosure, copying, display, reproduction or dissemination of this document and/or the information contained herein without the prior written consent of Fairfield Industries Incorporated is prohibited. Infringers may be subject to civil and/or criminal penalties (17 U.S.C. paragraphs 504-506).

PRINT SCALE 405:650

DRAWN	COPYRIGHT Copyright 1998 Fairfield Industries Incorporated: All Rights Reserved.
DATE	
CHECKED	NOTES:-
DATE	

SHEET DESCRIPTION:

Telemetry Transceiver Power Amp & Antenna Interface

ISSUE	DATE	DESCRIPTION
Iss 1	29/08/96	PCB Issue 1
Iss 2	12/12/97	TRANSFER FOR PRODUCTION
Iss 3	3/17/98	CHANGE P2 FROM 68-PIN TO 88-PIN
Iss 4	7/12/98	IMPROVE S/N
Iss 5	10/01/98	IMPROVE DC-NULL & STABILIZE PA GAIN

CIRCUIT DIAGRAM FOR:- RU RF BOARD

DRAWING NUMBER 101.6263 REV A

SHT. 5 OF 7

FAIRFIELD INDUSTRIES INCORPORATED

This document and the information contained herein
is the property of Fairfield Industries Incorporated.
Any use, disclosure, copying, display, reproduction
or dissemination of this document and/or the information
contained herein without the prior written consent of
Fairfield Industries Incorporated is prohibited.
Infringers may be subject to civil and/or criminal penalties
(17 U.S.C. paragraphs 504-506).

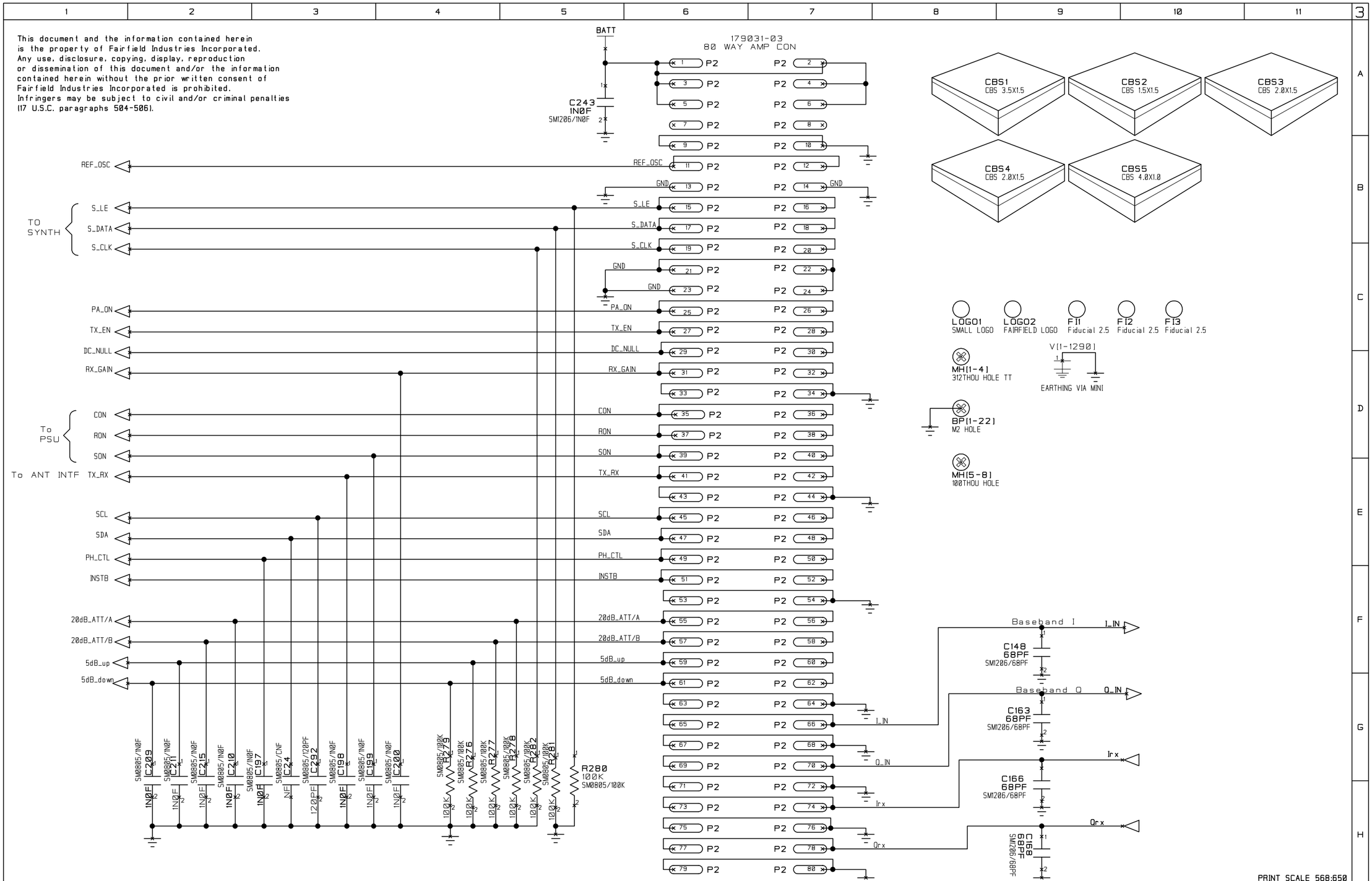

PRINT SCALE 568:650

DRAWN	COPYRIGHT Copyright 1998 Fairfield Industries Incorporated; All Rights Reserved.		ISSUE	DATE	DESCRIPTION	CIRCUIT DIAGRAM FOR:- RU RF BOARD	DRAWING NUMBER 101.6263 REV B
DATE	NOTES:-	SHEET DESCRIPTION:					SHT. 6 OF 7
CHECKED	P2 on back of board	Telemetry Transceiver IO				FAIRFIELD INDUSTRIES INCORPORATED	
DATE							

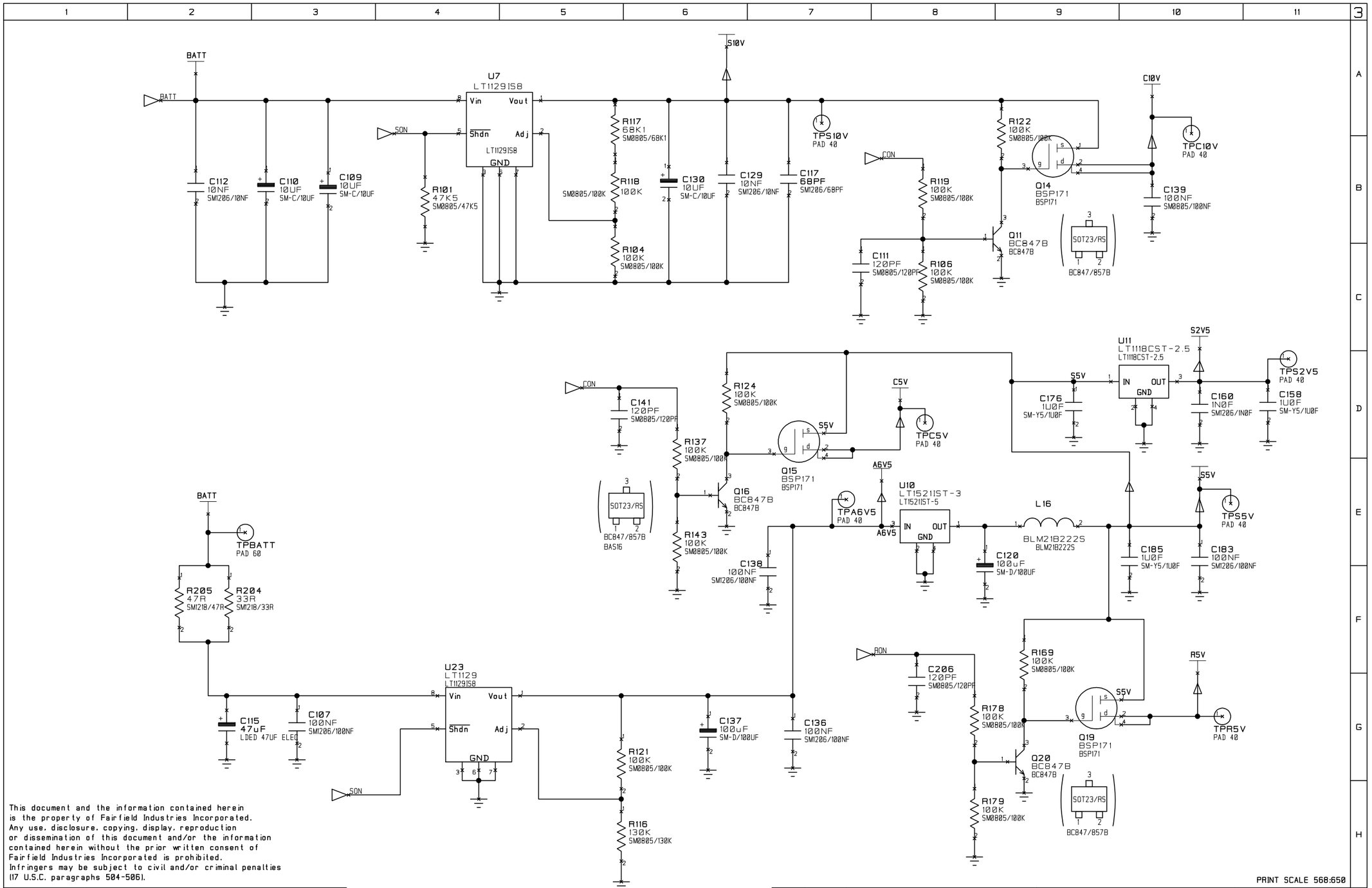

This document and the information contained herein is the property of Fairfield Industries Incorporated. Any use, disclosure, copying, display, reproduction or dissemination of this document and/or the information contained herein without the prior written consent of Fairfield Industries Incorporated is prohibited. Infringers may be subject to civil and/or criminal penalties (17 U.S.C. paragraphs 504-506).

PRINT SCALE 568:650

DRAWN	COPYRIGHT Copyright 1998 Fairfield Industries Incorporated: All Rights Reserved.	ISSUE	DATE	DESCRIPTION	CIRCUIT DIAGRAM FOR:- RU RF BOARD	DRAWING NUMBER 101.6263 REV A
DATE	NOTES:-					SHT. 7 OF 7
CHECKED						
DATE	SHEET DESCRIPTION: Telemetry Transceiver Power Supplies				FAIRFIELD INDUSTRIES INCORPORATED	

RU BASEBAND BOARD

REV	DESCRIPTION	DATE	APPROVED
C	ECN 101.1149. ADD FIDUCIALS; ROTATE JT1, ADD PULL DOWN RESISTORS FOR W-STRB AND R-STRB.	1/99	PS ABG 1/99

NOTES:
UNLESS OTHERWISE SPECIFIED:
1. RESISTOR VALUES ARE IN OHMS.
2. CAPACITOR VALUES ARE IN MICROFARADS.
3. INDUCTOR VALUES ARE IN MICROHENRIES

THIS BLOCK DESIGNATES REVISION LEVEL CHANGES TO INDIVIDUAL SHEETS
SHEET 1 ALWAYS CARRIES THE MOST RECENT REVISION LETTER

SHT	1	2	3	4	5	6	7	8	9	10	11	12	13	14	15	16	17	18	19	20	21	22	23	24	25	26	27	28	29	30	31	32	33	34	35	36
REV	C	C	B	B	B	C																														

Copyright 1998 Fairfield Industries Incorporated; All Rights Reserved This document and the information contained herein is the property of Fairfield Industries Incorporated. Any use, disclosure, copying, display, reproduction or dissemination of any part of this document and/or the information contained herein without the prior written authorization of Fairfield Industries Incorporated is prohibited. Infringers may be subject to civil and/or criminal penalties (17 U.S.C. paragraphs 504-506).

DR	JM	6/98
CHKR	ABG	11/98
ENG	PS	11/98
MFG	DES	11/98
PROJ ENG		

FAIRFIELD INDUSTRIES INCORPORATED

TITLE
SCHEMATIC, BASEBAND BOARD, RU

SIZE B | DWG NO: 101.6273 | REV C

SHT 1 OF 6

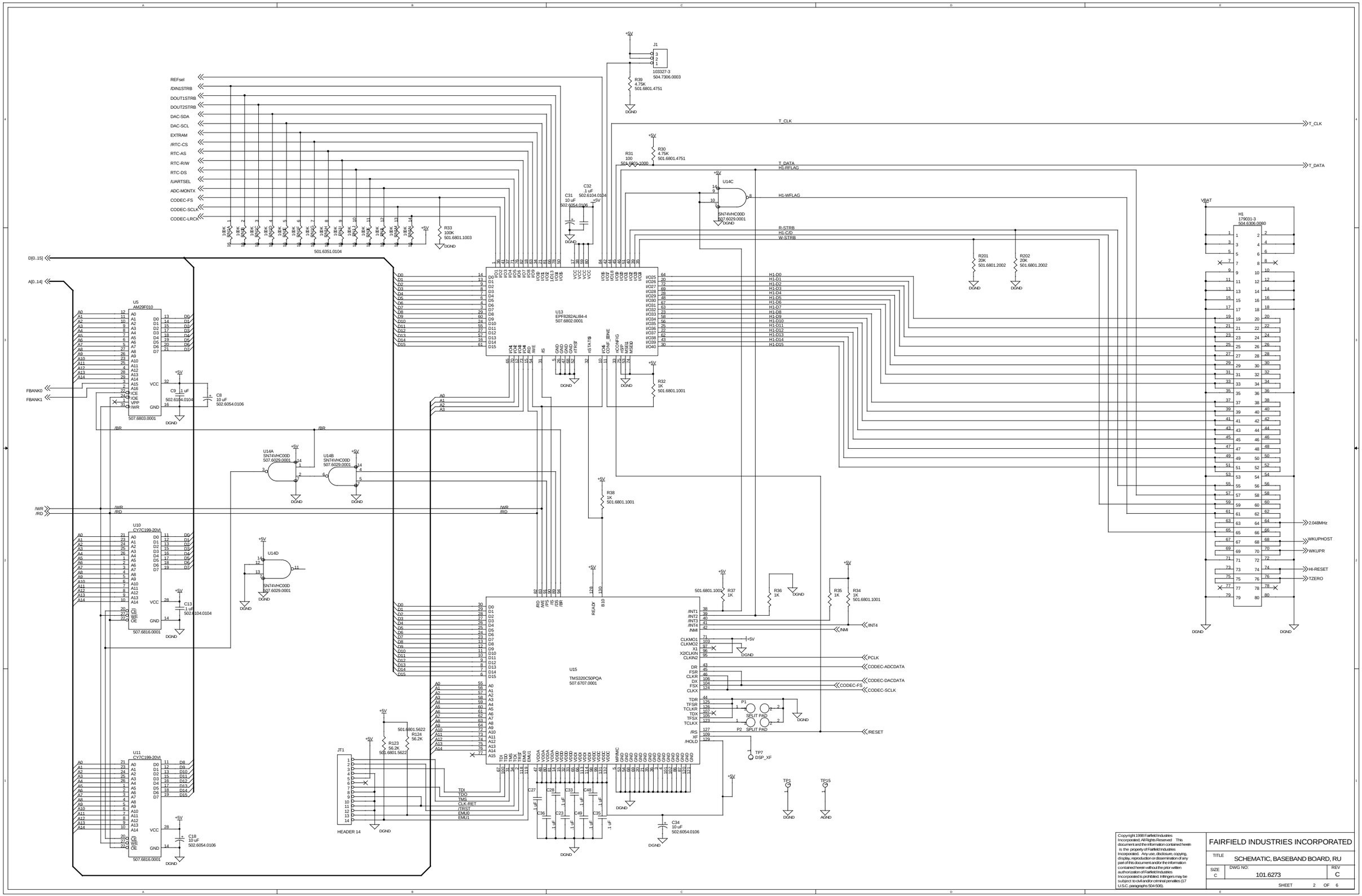

Copyright 1998 Fairfield Industries Incorporated. All Rights Reserved. This document and the information contained herein is the property of Fairfield Industries Incorporated. Any use, disclosure, copying, display, reproduction or dissemination of any part of this document and/or the information contained herein without the prior written authorization of Fairfield Industries Incorporated is prohibited. Infringers may be subject to civil and/or criminal penalties (17 U.S.C. paragraphs 504-506).

FAIRFIELD INDUSTRIES INCORPORATED

TITLE: SCHEMATIC, BASEBAND BOARD, RU

SIZE	DWG NO:	REV
C	101.6273	C

SHEET 2 OF 6

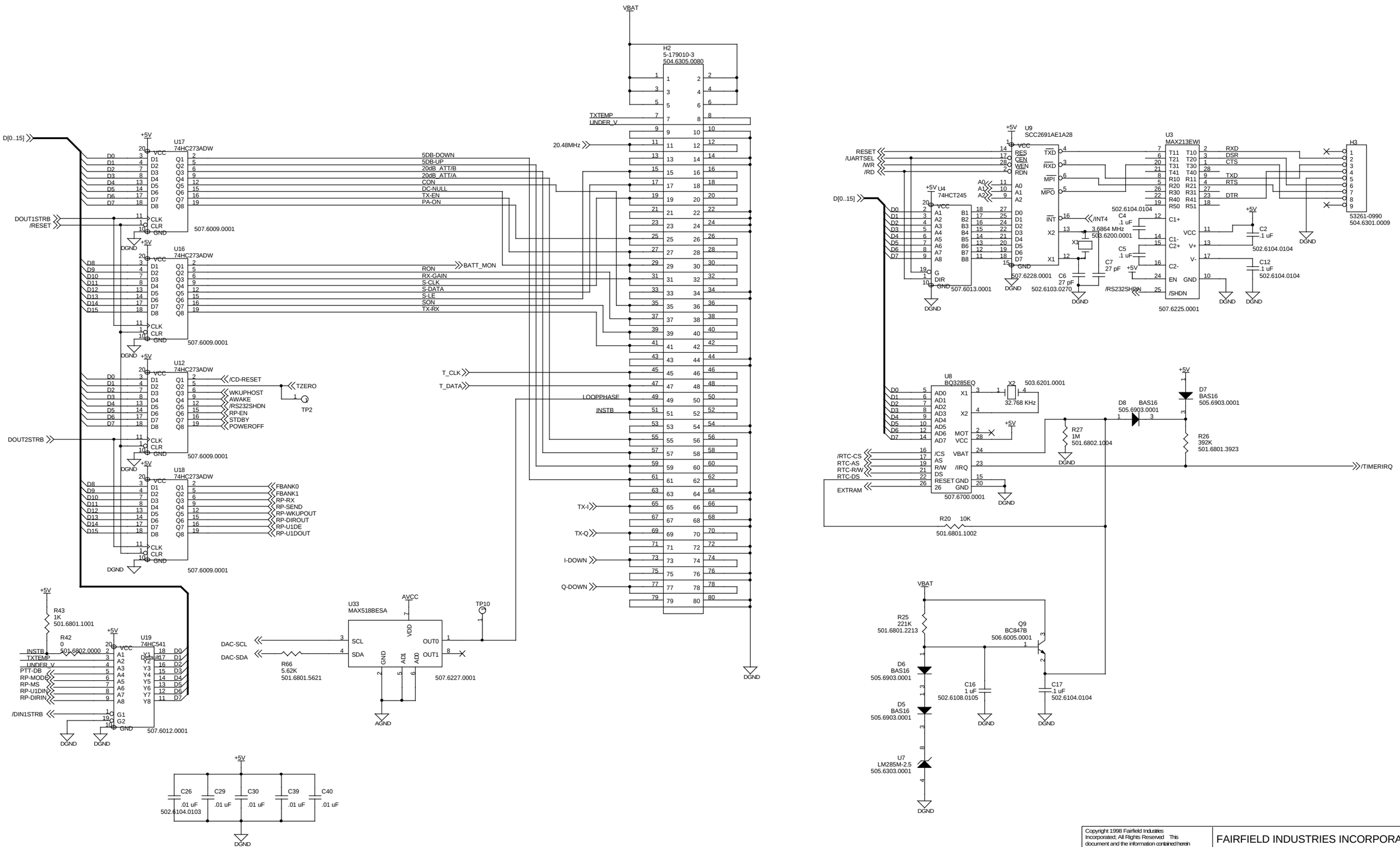

Copyright 1998 Fairfield Industries Incorporated; All Rights Reserved This document and the information contained herein is the property of Fairfield Industries Incorporated. Any use, disclosure, copying, display, reproduction or dissemination of any part of this document and/or the information contained herein without the prior written authorization of Fairfield Industries Incorporated is prohibited. Infringers may be subject to civil and/or criminal penalties (17 U.S.C. paragraphs 504-506).

FAIRFIELD INDUSTRIES INCORPORATED

TITLE	SCHEMATIC, BASEBAND BOARD, RU	
SIZE C	DWG NO: 101.6273	REV B
	SHEET 3 OF 6	

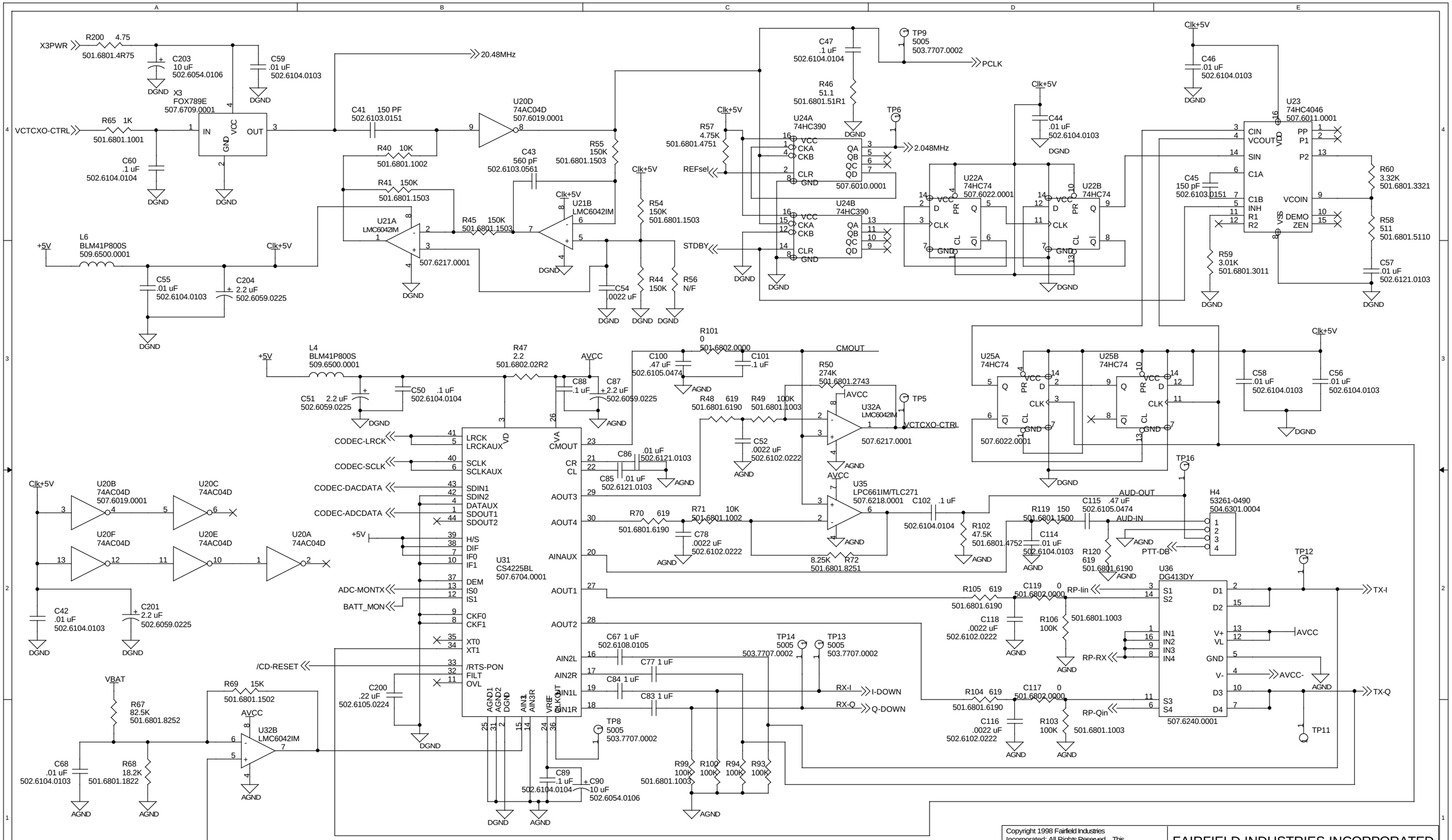

Copyright 1998 Fairfield Industries Incorporated; All Rights Reserved This document and the information contained herein is the property of Fairfield Industries Incorporated. Any use, disclosure, copying, display, reproduction or dissemination of any part of this document and/or the information contained herein without the prior written authorization of Fairfield Industries Incorporated is prohibited. Infringers may be subject to civil and/or criminal penalties (17 U.S.C. paragraphs 504-506).

FAIRFIELD INDUSTRIES INCORPORATED

TITLE: SCHEMATIC, BASEBAND BOARD, RU

SIZE	DWG NO:	REV
C	101.6273	B

SHEET 4 OF 6

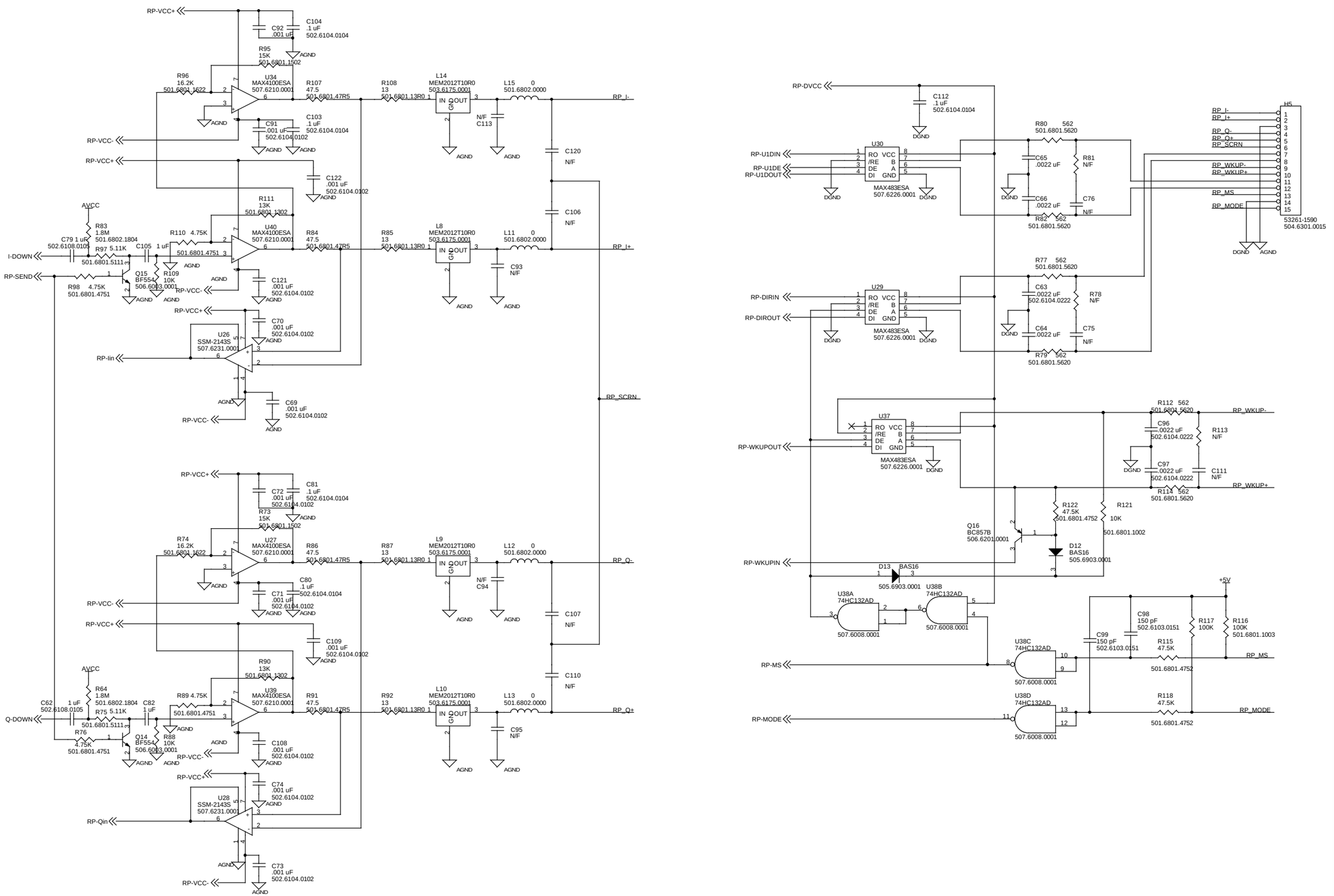

Copyright 1998 Fairfield Industries Incorporated; All Rights Reserved This document and the information contained herein is the property of Fairfield Industries Incorporated. Any use, disclosure, copying, display, reproduction or dissemination of any part of this document and/or the information contained herein without the prior written authorization of Fairfield Industries Incorporated is prohibited. Infringers may be subject to civil and/or criminal penalties (17 U.S.C. paragraphs 504-506).

FAIRFIELD INDUSTRIES INCORPORATED

TITLE: SCHEMATIC, BASEBAND BOARD, RU

SIZE	DWG NO:	REV
C	101.6273	B

SHEET 5 OF 6

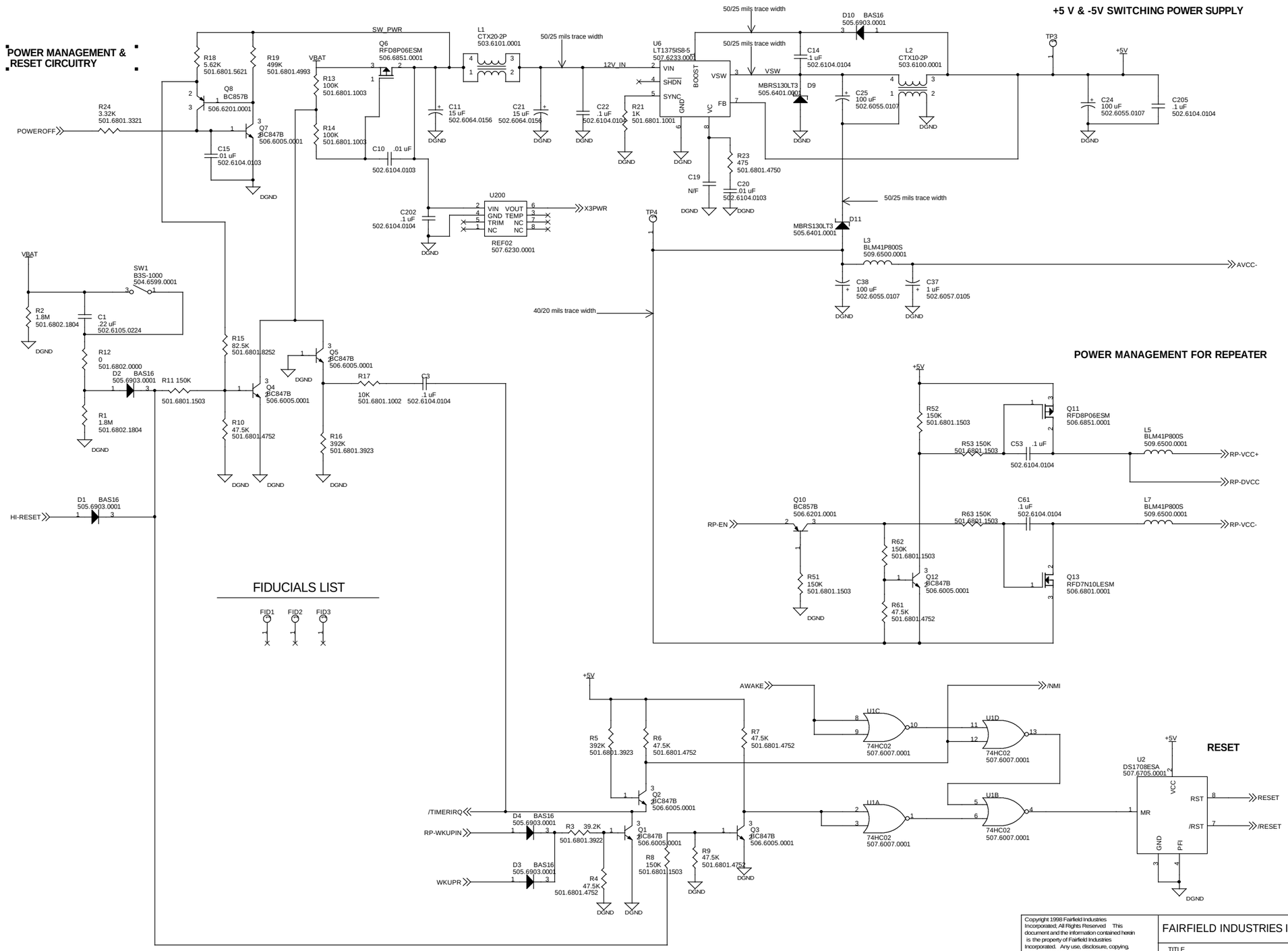

Copyright 1998 Fairfield Industries Incorporated, All Rights Reserved This document and the information contained herein is the property of Fairfield Industries Incorporated. Any use, disclosure, copying, display, reproduction or dissemination of any part of this document and/or the information contained herein without the prior written authorization of Fairfield Industries Incorporated is prohibited. Infringers may be subject to civil and/or criminal penalties (17 U.S.C. paragraphs 504-506).

FAIRFIELD INDUSTRIES INCORPORATED

TITLE: SCHEMATIC, BASEBAND BOARD, RU

SIZE: C | DWG NO: 101.6273 | REV: C

SHEET 6 OF 6