REVISIONS			
LTR	DESCRIPTION		APPROVED
A	NEW ASSEMBLY CREATE, ECO6528	RT	

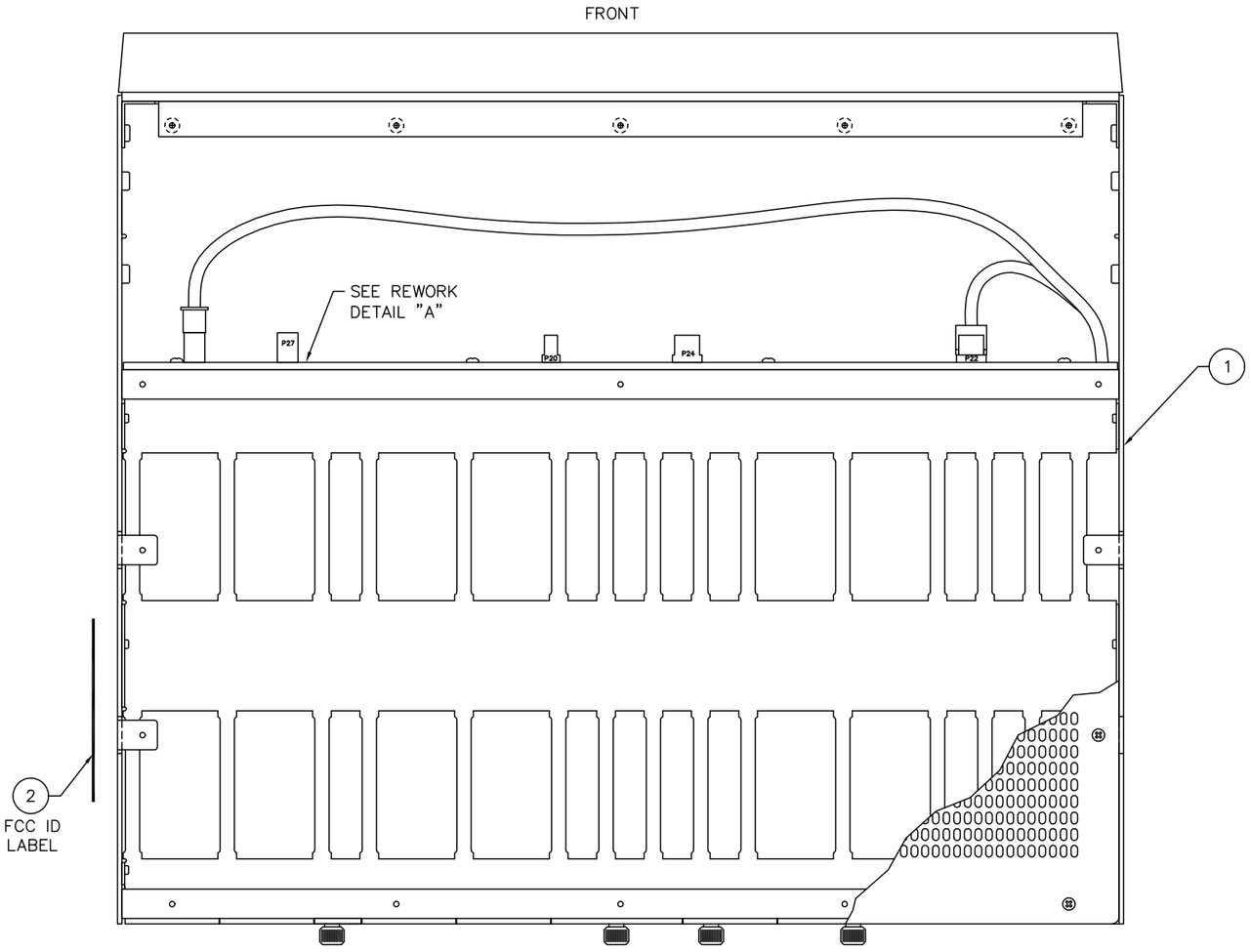

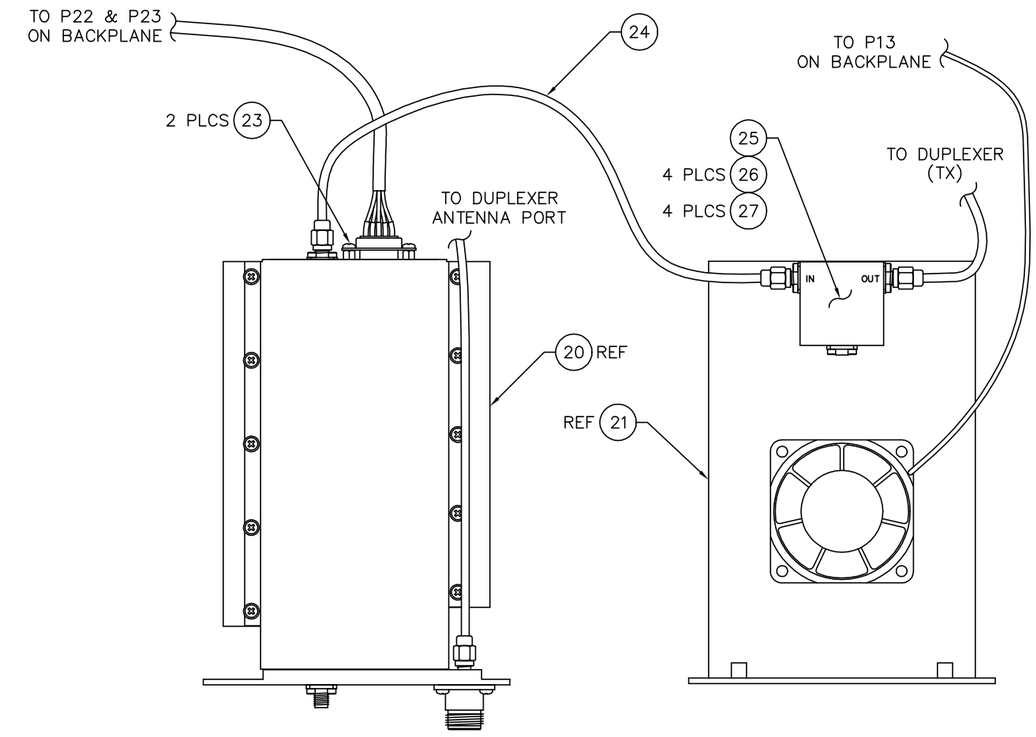

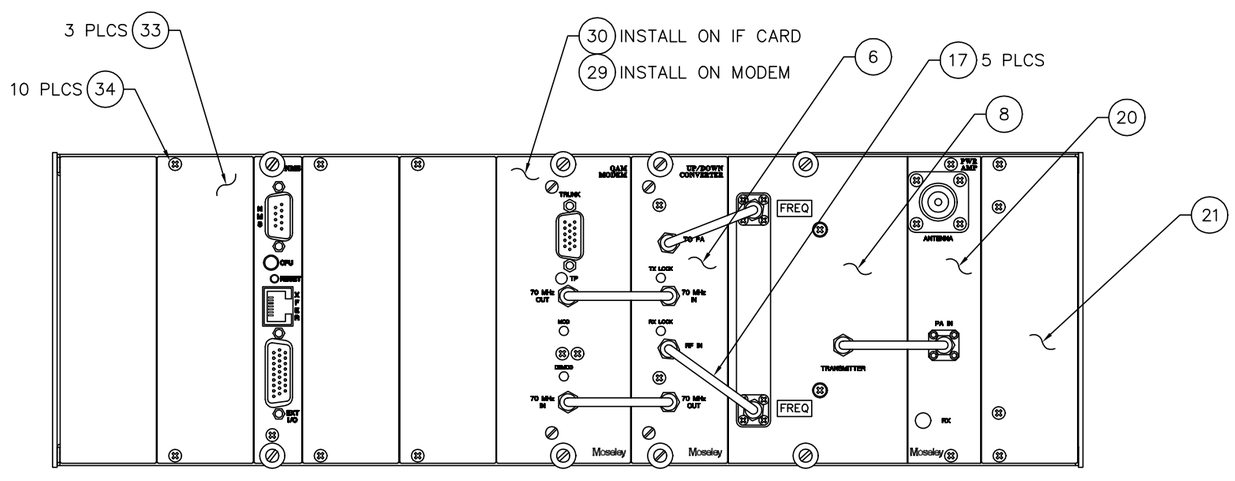

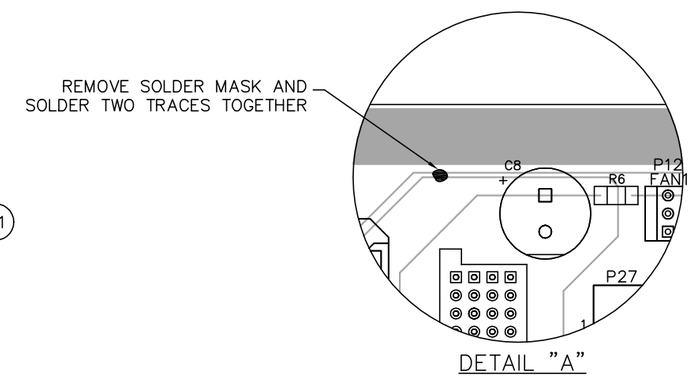

SCALE: 40%	DWG SIZE B	Moseley 111 CASTILIAN DRIVE SANTA BARBARA, CA 93117	
(DO NOT SCALE DWG)		ASSY 2.1T/2.1R 1T1 1M NXE1	
APPROVALS	DATE		
DWN R.E.T.	01/23/02		
CHK			
ENG		ITEM 955-13460-01	REV. A
SHEET 1 OF 1			

TOLERANCE : ∠ ±1/2°, .XX ±.030, .XXX ±.010

C:\My Documents\dwg\ECO6528\955-13460-01_REV-A.DWG