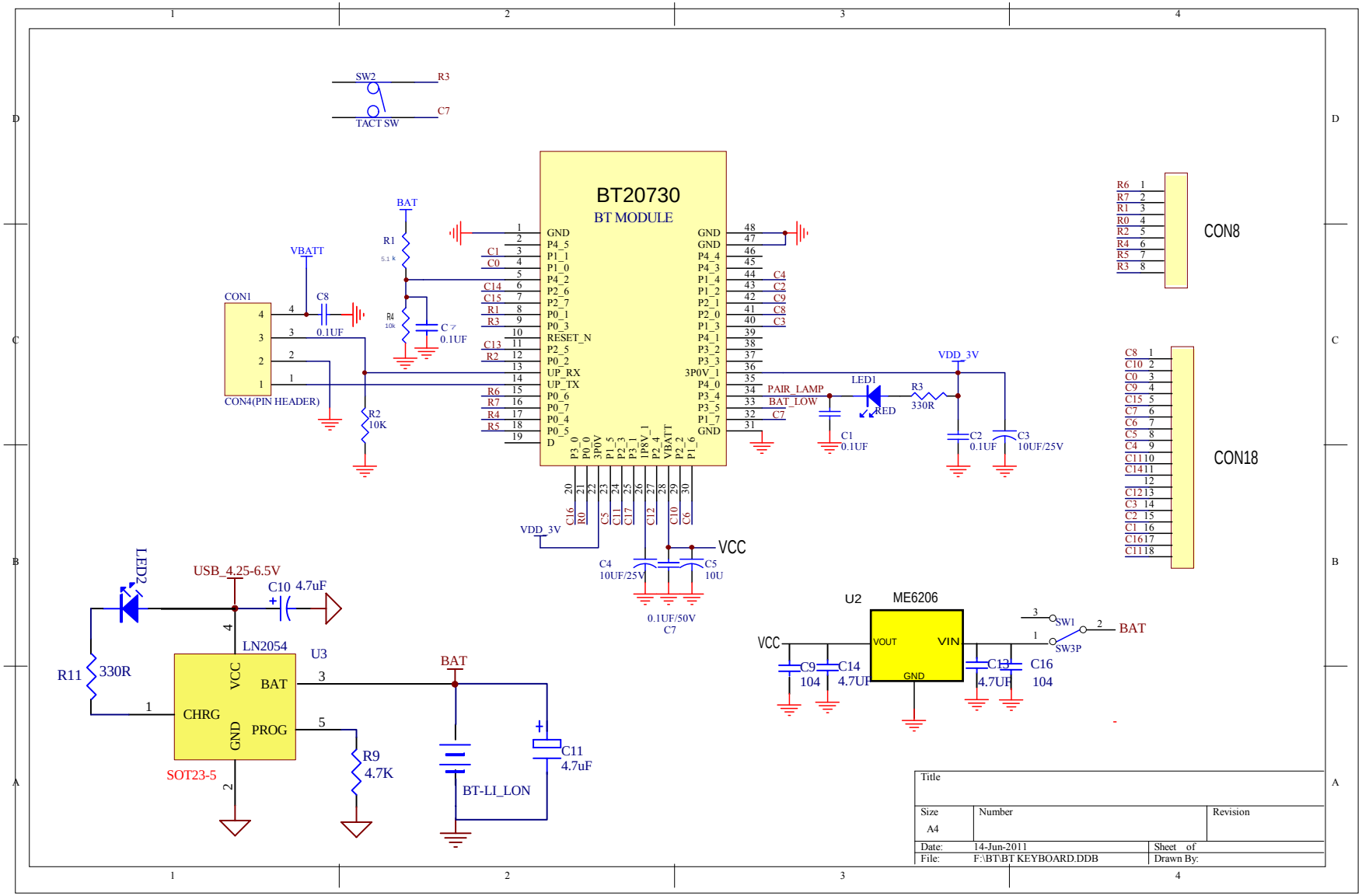
SW2
R3
C7
TACT SW
BT20730
BT MODULE
GND
P4_5
P1_1
P1_0
P4_2
P2_6
P2_7
P0_1
P0_3
RESET_N
P2_5
P0_2
UP_RX
UP_TX
P0_6
P0_7
P0_4
P0_5
D
P3_0
P0_0
3P0V
P1_5
P2_3
P3_1
1P8V_1
P2_4
VBATT
P2_2
P1_6
GND
P4_4
P4_3
P1_4
P1_2
P2_1
P2_0
P1_3
P4_1
P3_2
P3_3
3P0V_1
P4_0
P3_4
P3_5
P1_7
GND
BAT
R1
5.1 k
R4
10k
C7
0.1UF
VBATT
CON1
C8
0.1UF
CON4(PIN HEADER)
R2
10K
PAIR_LAMP
BAT_LOW
LED1
RED
R3
330R
VDD_3V
C1
0.1UF
C2
0.1UF
C3
10UF/25V
C4
10UF/25V
C5
10U
0.1UF/50V
C7
VCC
CON8
CON18
LED2
USB_4.25-6.5V
C10 4.7uF
R11
330R
LN2054
U3
VCC
BAT
CHRG
GND
PROG
SOT23-5
R9
4.7K
BAT
BT-LI_LON
C11
4.7uF
U2
ME6206
VOUT
VIN
GND
VCC
C9
104
C14
4.7UF
C13
4.7UF
C16
104
SW1
SW3P
BAT
Title
Size
A4
Number
Revision
Date: 14-Jun-2011
Sheet of
File: F:\BT\BT KEYBOARD.DDB
Drawn By:

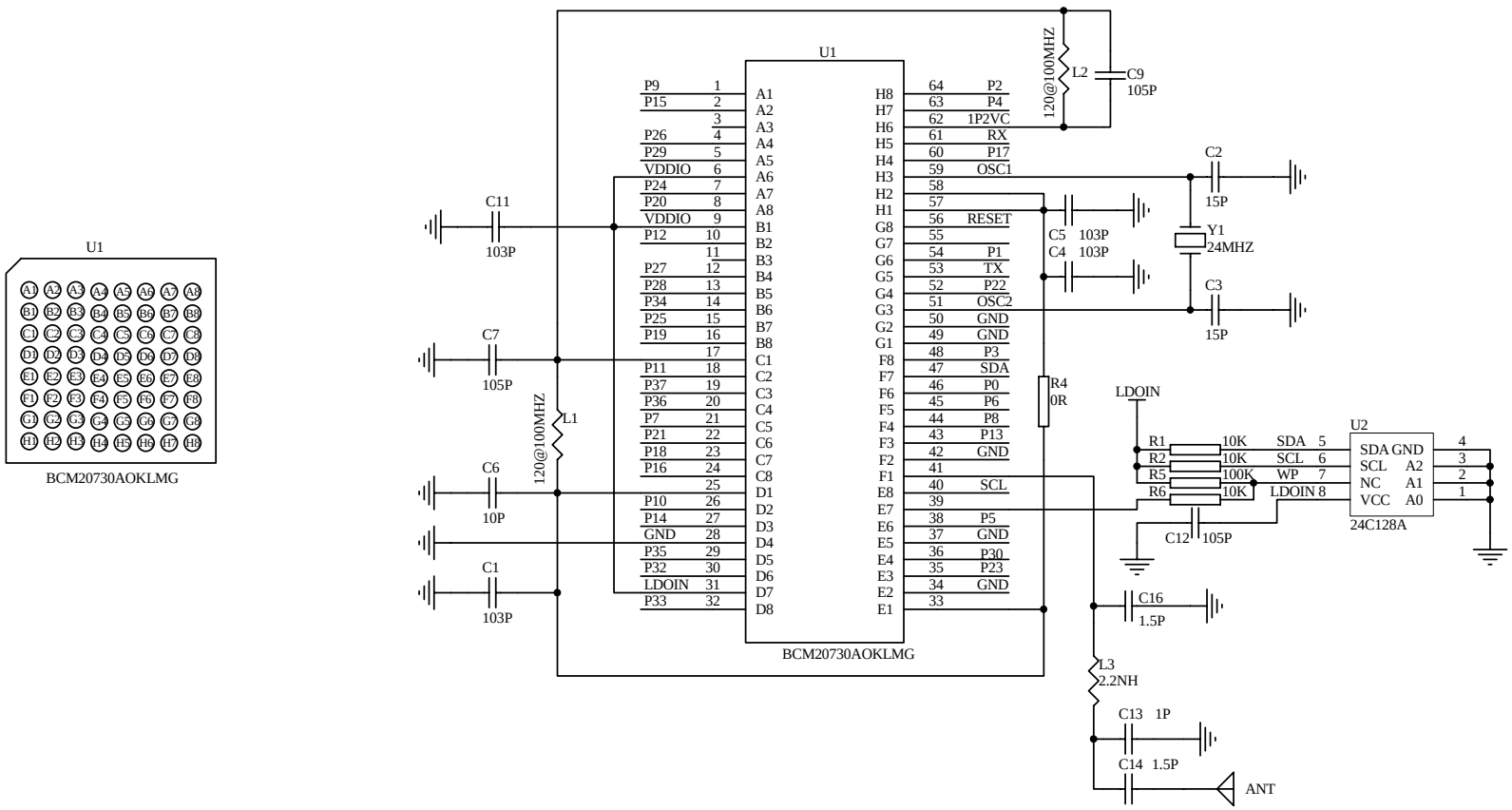


| Title | BCM20730模组原理图 | |
|---|---|---|
| Size A4 | Number | Revision |
| Date: 27-Sep-2011 | Sheet of | |
| File: E:\资料\0608\蓝牙键盘\GH-20730 V1.1.dd | Drawn By: | |