ASSY	DESCRIPTION	APPROVED	DATE
TBD	PRODUCTION RELEASE		7/29/02

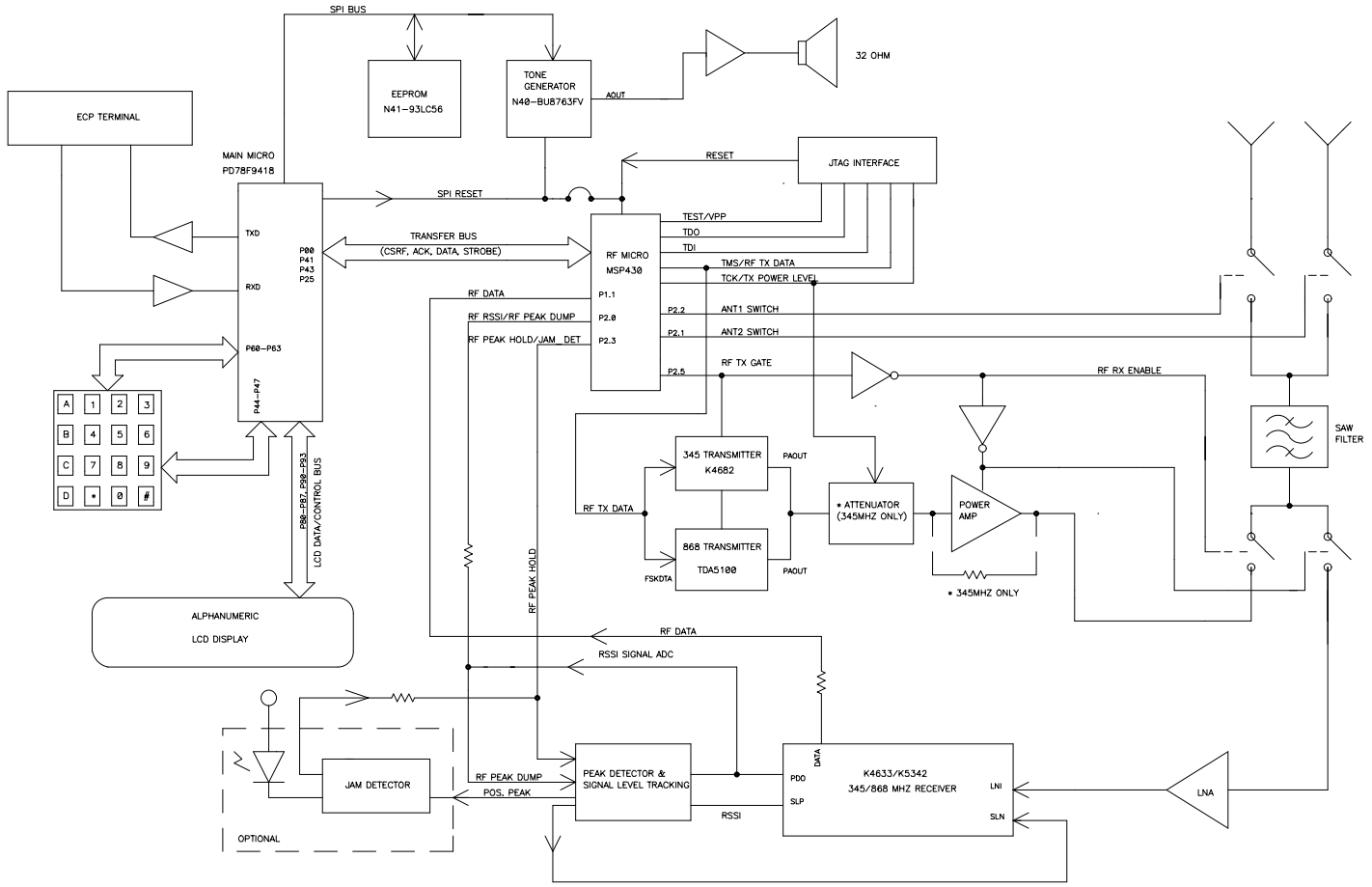

ASSEMBLIES	LAST USED		DO NOT USE	APPROVALS	DATE
SA	R	SW		DRAWN BY D. Schmitz	7/29/02
	C	W		CHECKED BY	
	CR	XL			
	Q	L			
	U	TP		APPROVED BY	
	FL	Z			
	TB				

ADEMCO
165 EILEEN WAY
SYOSSET, NEW YORK 11791

PCB (REF) K0122V1 REV A

TITLE BLOCK DIAGRAM

DRAWING NUMBER CP6160RF

COMPUTER FILE NAME cp6160RF.sch

DATE:

SHEET 2 OF 10