ASSY REV	DESCRIPTION	DATE	APPROVED
F	SEE SHEET 1 OF 2.	12-20-05	RO.

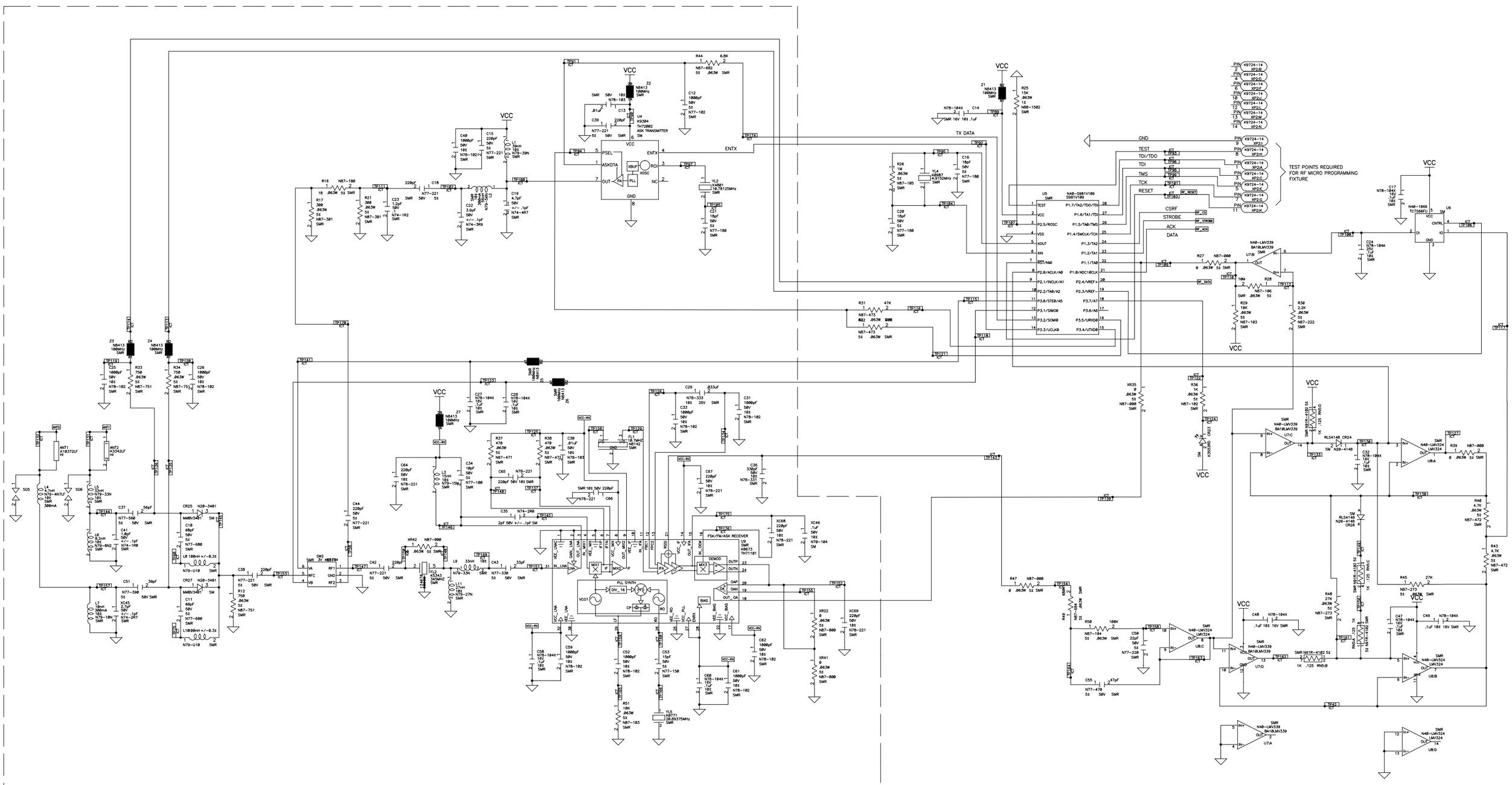

APPROVALS	DATE
PROJECT ENG. ERIC OH	
ELECTRICAL ENG. F. VALLADARES	
MFG. ENG. D. DESENNA	
IN CIRCUIT TEST ENGR. M. SIDDIQ	
FUNCTIONAL TEST ENGR.	
CREATED BY: L.STERNSTEIN	3/14/05

Honeywell 165 EILEEN WAY SYOSSET, NEW YORK 11791

PCB (REF) K9608V1 REV.A

TITLE SCHEMATIC WIRING 6160RFAS-T3 KEYPAD (RF)

DRAWING NUMBER SA6150RFAS-T3

COMPUTER FILE NAME SA6150RFAS-T3.sch

DATE: 06/28/05 SHEET 5 OF 5