EXHIBIT 1 CFS80LS845ØW

ASSY REV	REV	DESCRIPTION	DATE	APPROVED
	A	PRODUCTION RELEASE	4-21-98	
	B	ECN16857 "D" C20, R2, C3, P1, C13 WAS N71-100. PRODUCTION RELEASE	7/01/98	

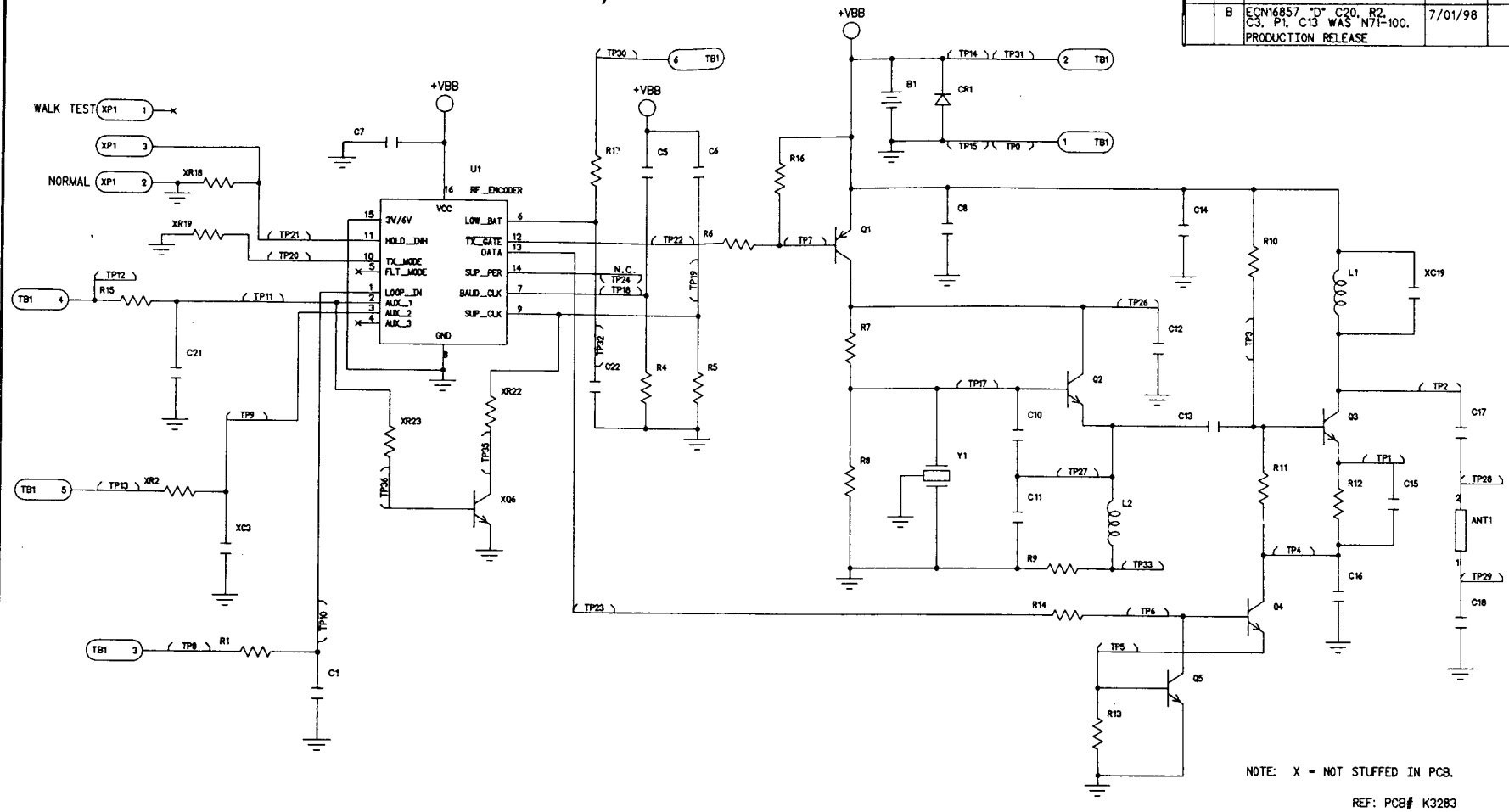

NOTE: X = NOT STUFFED IN PCB.

REF: PCB# K3283

LAST USED	NOT USED	APPROVALS	DATE

ALARM DEVICE MFG. CO.
165 EILEEN WAY
SYOSSET, NEW YORK 11791

ADEMCO

TITLE: TRANSMITTER

DOCUMENT NUMBER: SA58450W

SIZE: B | FILE NAME: 58450W.SCH | REV

DATE: 3-20-98 | SHEET 1 OF 1