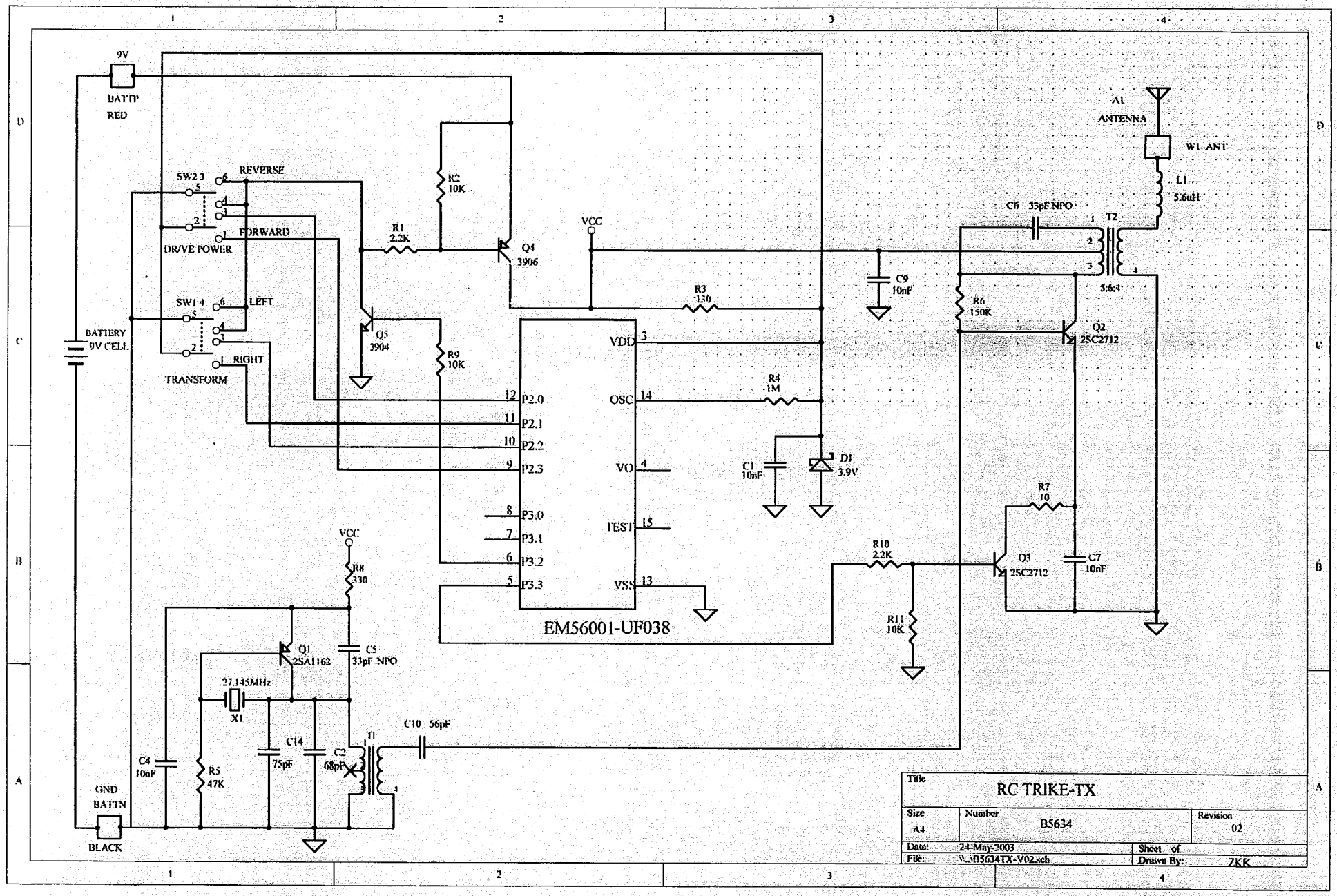
9V
BATTP
RED
SW2 3
REVERSE
FORWARD
DRIVE POWER
SW1 4
LEFT
RIGHT
TRANSFORM
BATTERY
9V CELL
GND
BATTN
BLACK
R1
2.2K
R2
10K
Q4
3906
Q5
3904
R9
10K
VCC
R3
130
R4
1M
C1
10nF
D1
3.9V
VDD
OSC
VO
TEST
VSS
P2.0
P2.1
P2.2
P2.3
P3.0
P3.1
P3.2
P3.3
EM56001-UF038
R8
330
Q1
2SA1162
C5
33pF NPO
27.145MHz
X1
C4
10nF
R5
47K
C14
75pF
C2
68pF
T1
C10 56pF
C9
10nF
C6 33pF NPO
T2
5:6:4
A1
ANTENNA
W1 ANT
L1
5.6uH
R6
150K
Q2
2SC2712
R7
10
C7
10nF
R10
2.2K
Q3
2SC2712
R11
10K
Title
RC TRIKE-TX
Size
A4
Number
B5634
Revision
02
Date:
24-May-2003
Sheet of
File:
\\...\B5634TX-V02.sch
Drawn By:
ZKK