EXHIBIT E

Block Diagram

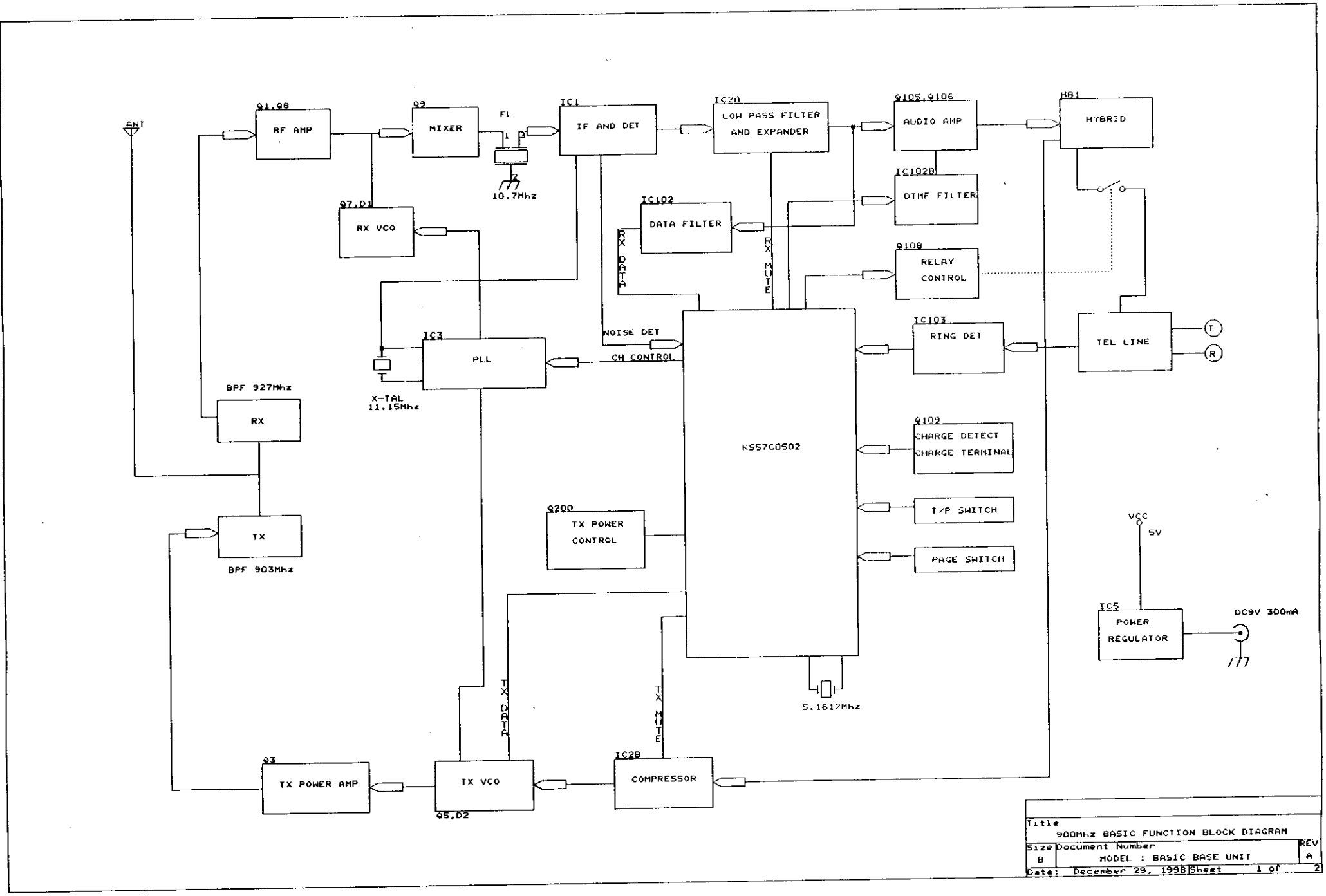

Title	900Mhz BASIC FUNCTION BLOCK DIAGRAM	
Size B	Document Number MODEL : BASIC BASE UNIT	REV A
Date: December 29, 1998	Sheet 1 of 2	

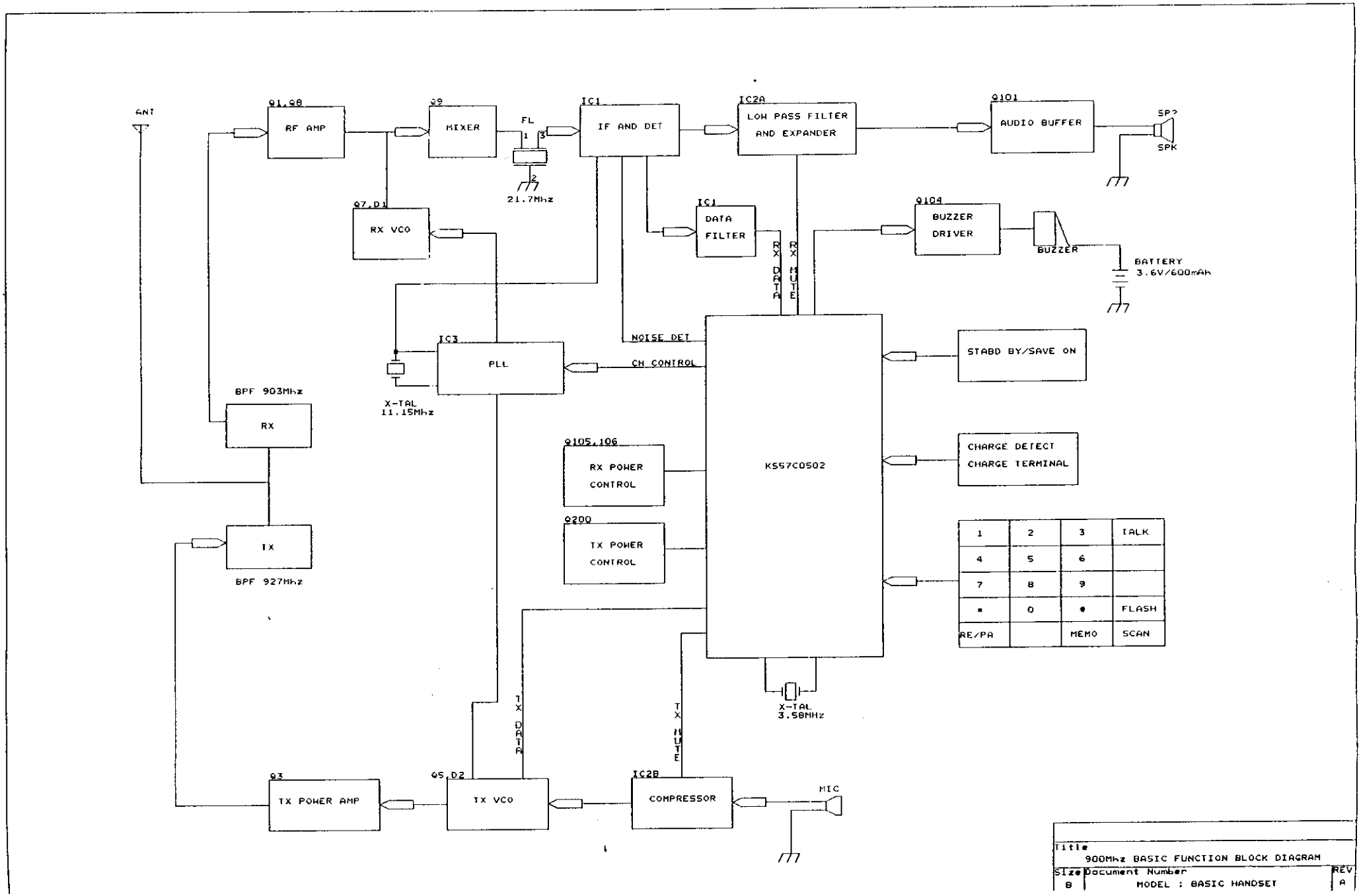

Title
900Mhz BASIC FUNCTION BLOCK DIAGRAM

Size B | Document Number MODEL : BASIC HANDSET | REV A