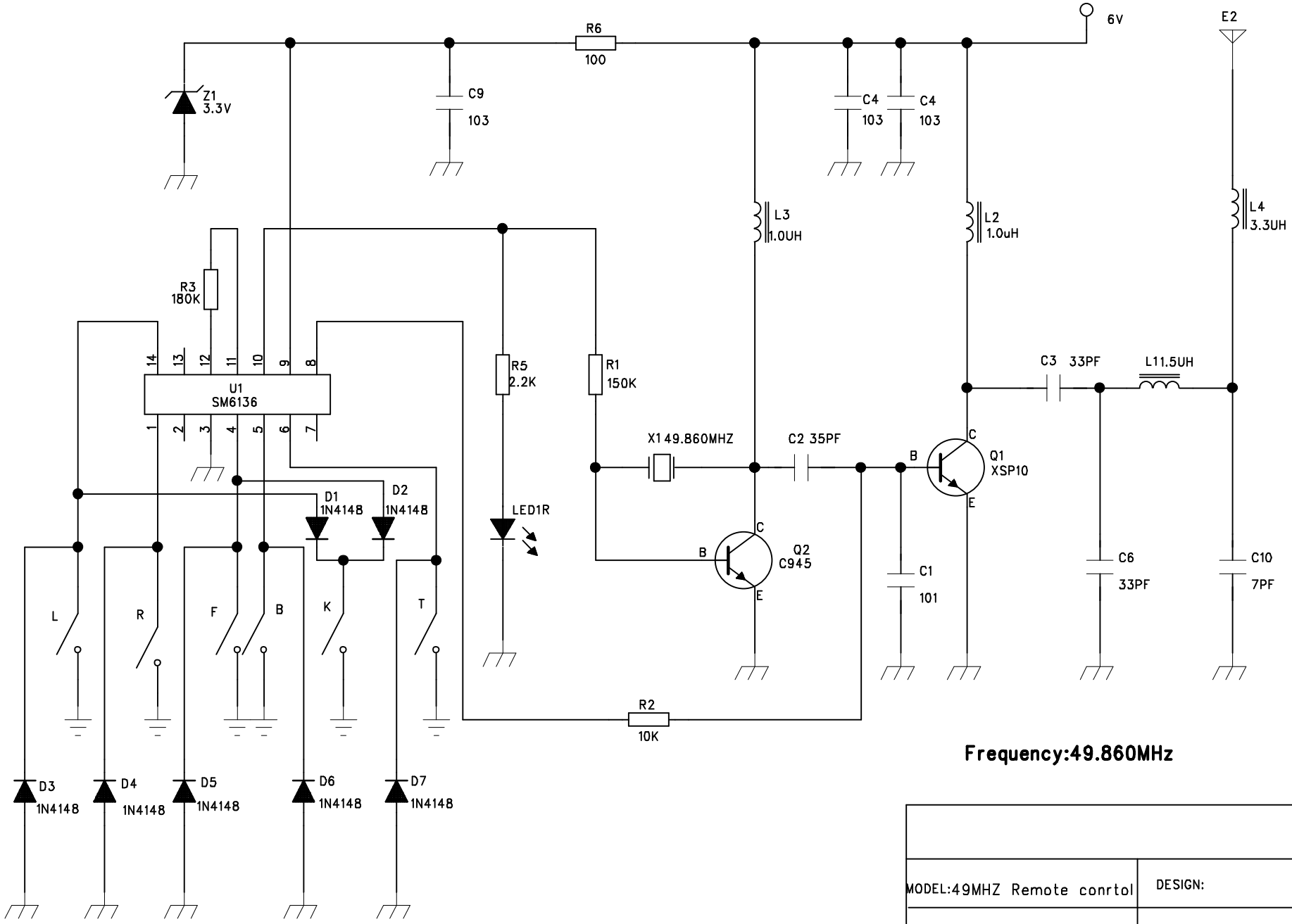49M遥控器.sch-1 - Fri Dec 10 09:37:57 2004