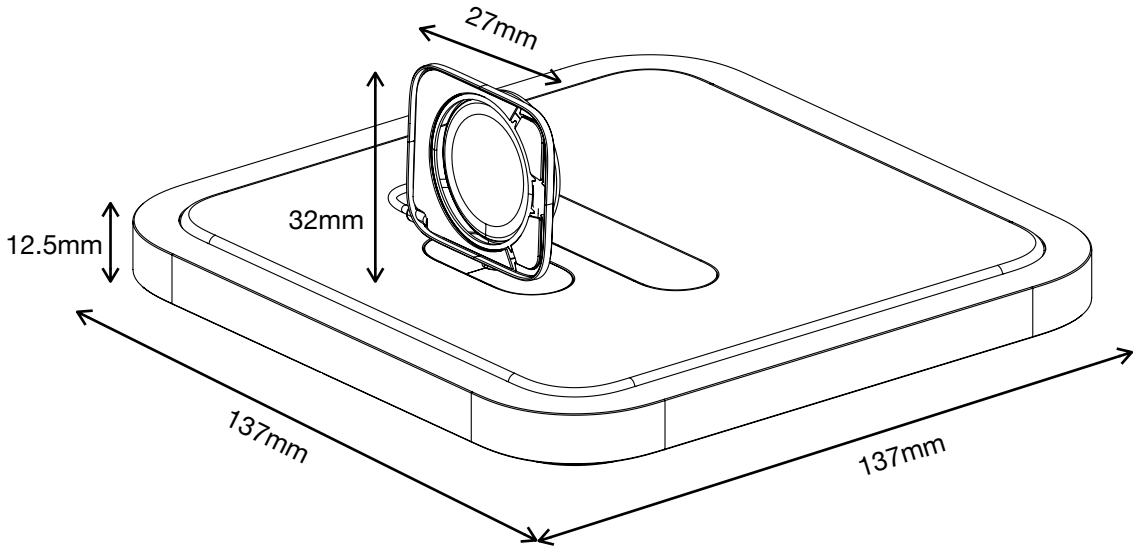
27mm
32mm
12.5mm
137mm
137mm