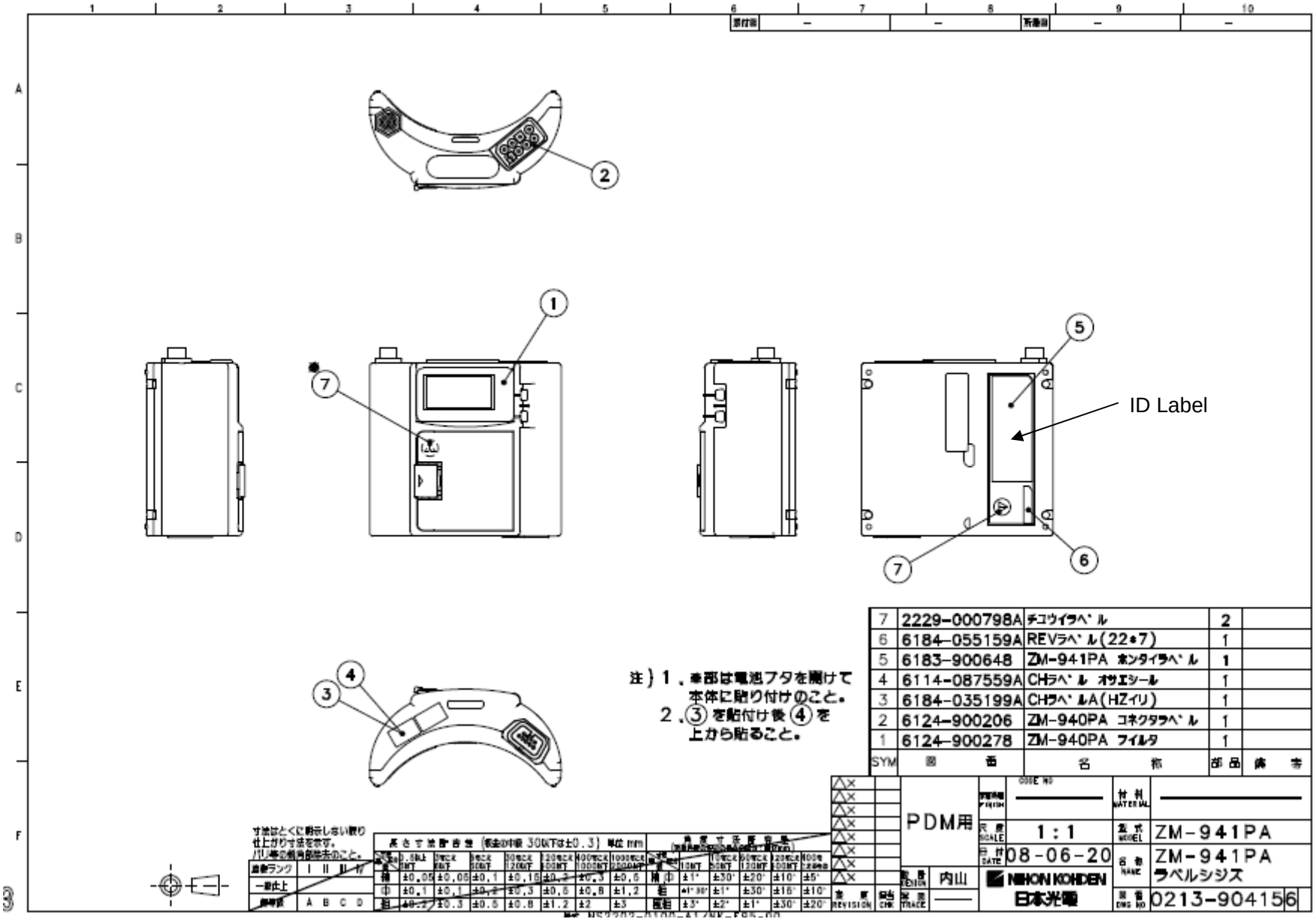ID Label Location ZM-941PA