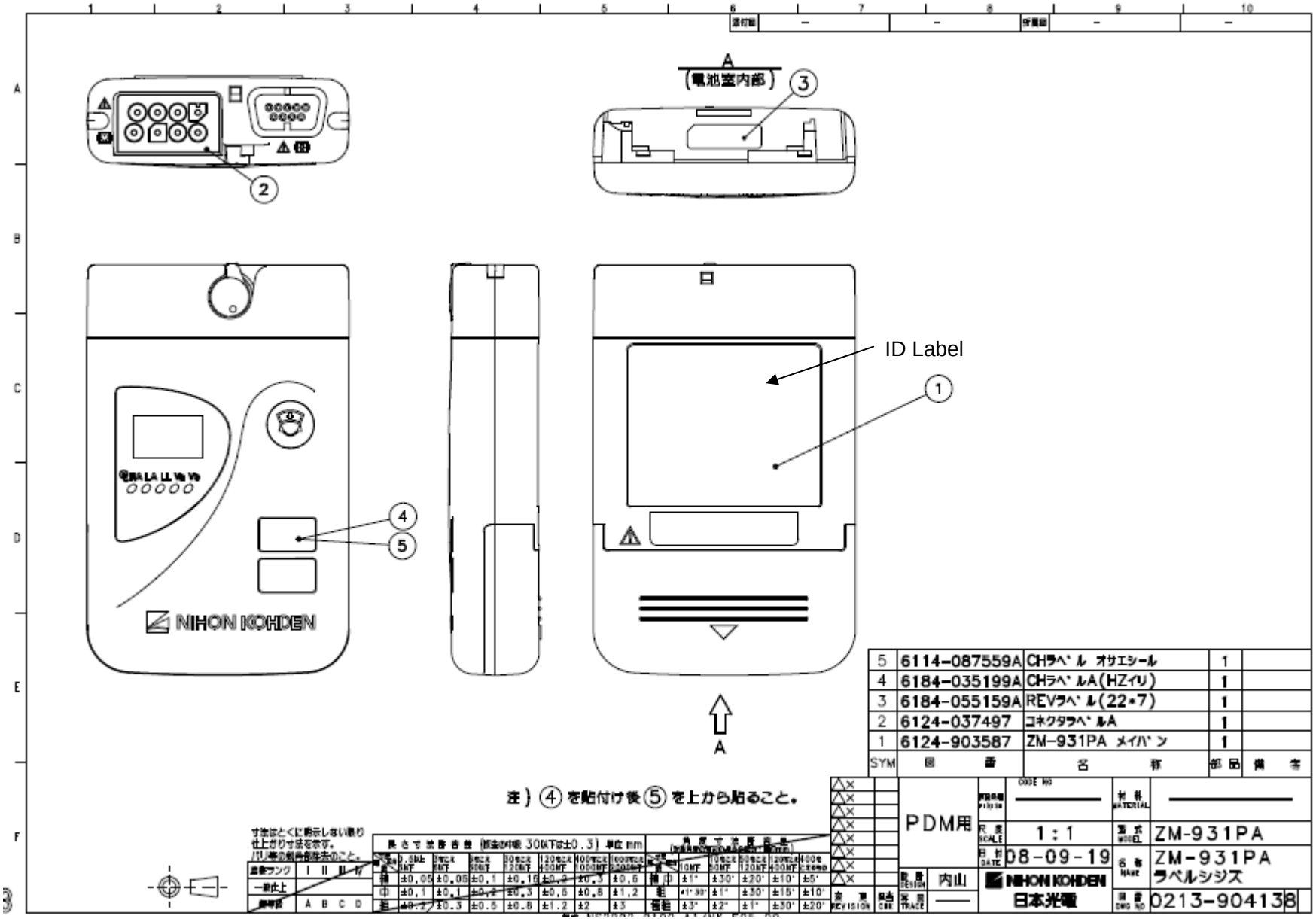ID Label Location ZM-931PA