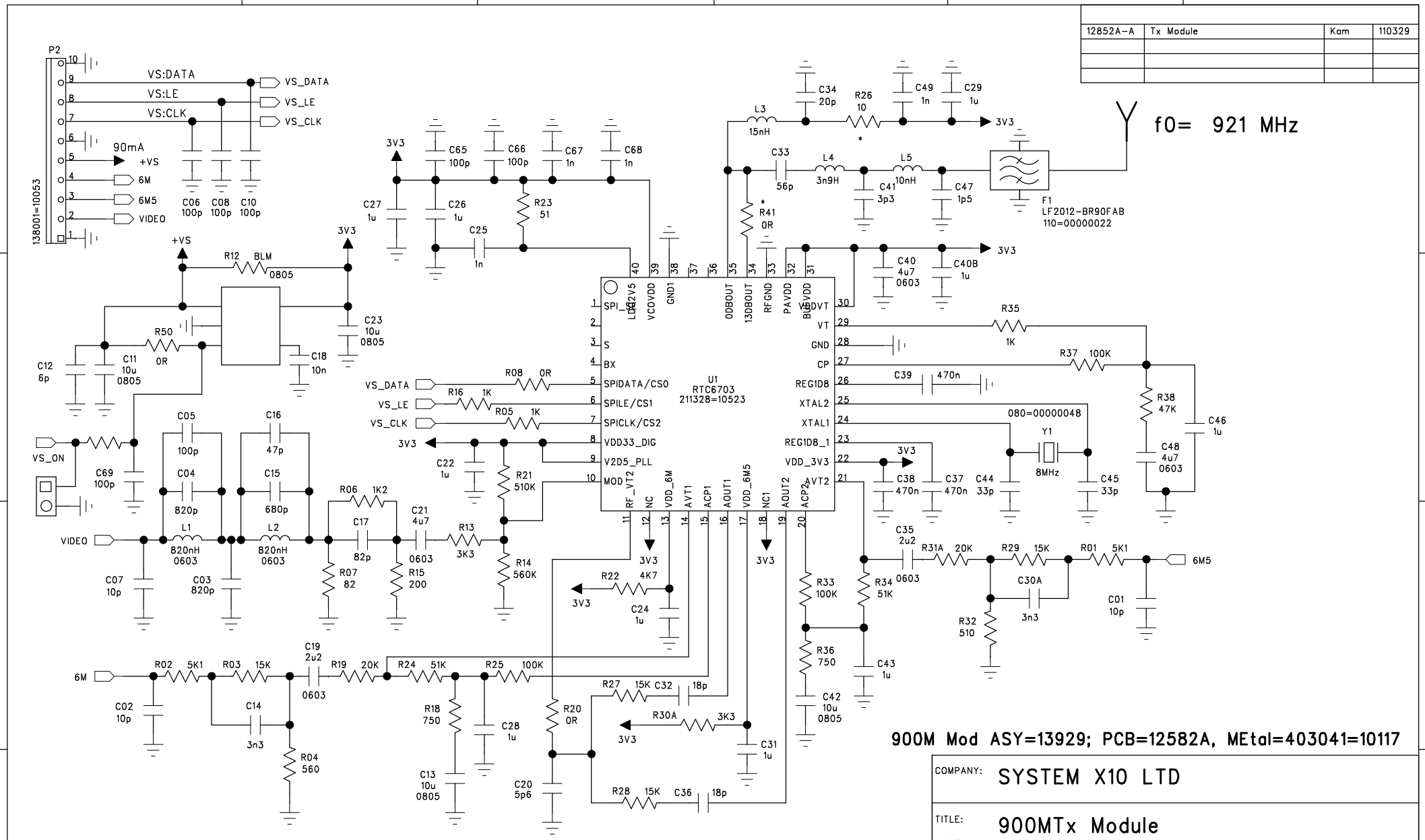

12852A-A	Tx Module	Kam	110329

DRAWN: Kam	DATED: 110202	COMPANY: SYSTEM X10 LTD	
CHECKED: Kam	DATED: 110331	TITLE: 900MTx Module	
QUALITY CONTROL:	DATED:	MODEL 900M Tx Module	
RELEASED:	DATED:	CODE: / SIZE: / DRAWING NO: SCH.12582	REV: -1
		SCALE:	SHEET: 3 OF 3