REVISIONS				
ZONE	REV	DESCRIPTION	DATE	APPROVED
	01	PREPRODUCTION RELEASE	-	-
	02	BOARD SPIN 2 UPDATED	10/10/01	BJMAAT

NOTES: UNLESS OTHERWISE SPECIFIED.

1. INTERPRET DRAWING PER MIL-STD-100.
2. ALL RESISTANCE VALUES ARE IN OHMS,
3. CAPACITANCE VALUES ARE IN MICROFARADS,
4. LAST REF DES USED:
   B1,C550,D69,FL6,J5,L80,P2,Q71,R580,RT1,
   T2,TP24,U77,Y1
5. REF DES NOT USED:
   C20,C24,C32,C33,C35-C37,C39-C42,C44-C52,
   C54,C55,C58,C60,C62-C73,C76,C79,C80,C85,
   C89-C91,C93,C99,C119,C122,C147,C153,C189,C194,C197,
   C198,C204,C205,C207,C208,C210-C213,C217-C221,
   C232,C234,C238,C239,C243,C250-C255,C258-C266,
   C272-C274,C277,C278,C280-C283,C291,C296-C300,
   C313-C317,C320-C327,C329,C330,C333,C391,C394-C398,
   C402-C404,C530,C533,C548,D5,D6,D22,D29-D34,D51,
   J1,J4,L23,L26,L27,L29,L32-L34,L36,L54,L57-L59,L67,P1,
   Q3-Q6,Q8,Q9,Q20,Q28-Q30,Q37-Q45,Q56,R13-R30,R32,
   R34-R43,R45,R46,R50,R53,R54,R56,R58-R63,R88,
   R90,R93,R108,R158,R161,R163-R168,R170,R174,
   R176,R184,R188-R190,R192,R194,R195,R197-R202,
   R205,R207,R209-R211,R216,R221,R223,R226,R228,
   R231-R235,R239,R242-R249,R260,R261,R265,
   R267-R271,R274,R275,R277,R278,R285,R286,R289,
   R301-R305,R307-R314,R317,R318,R379,R383,R397,
   R399,R402-R405,R407,R425,R438,R441-R443,R508,
   R509,R519,R520,R532,TP4,TP15,TP16,TP22,TP23,U2,
   U5-U10,U18,U22,U23,U25,U26,U30,U34,U38-U41,
   U61,U66,U67,U72

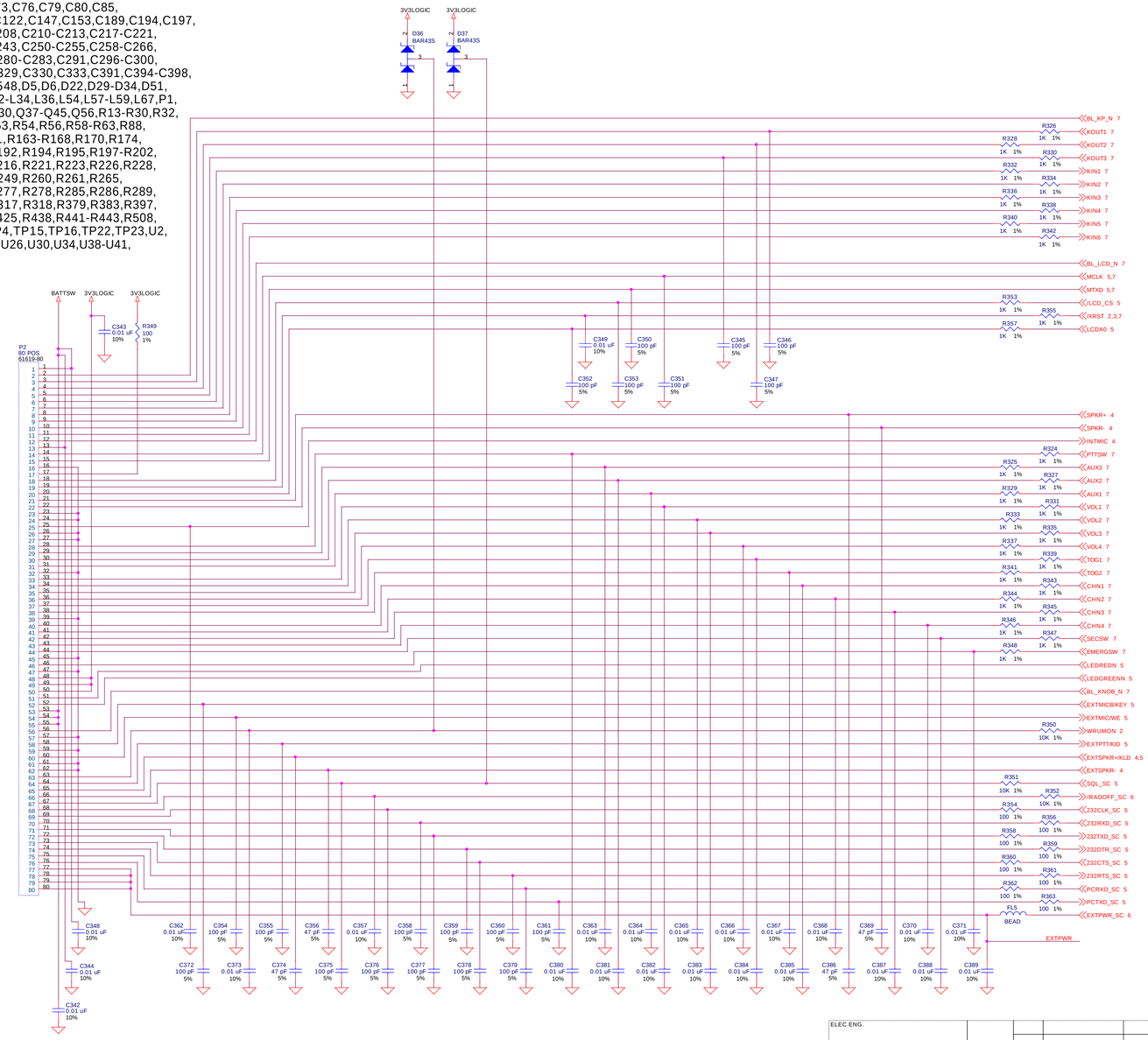

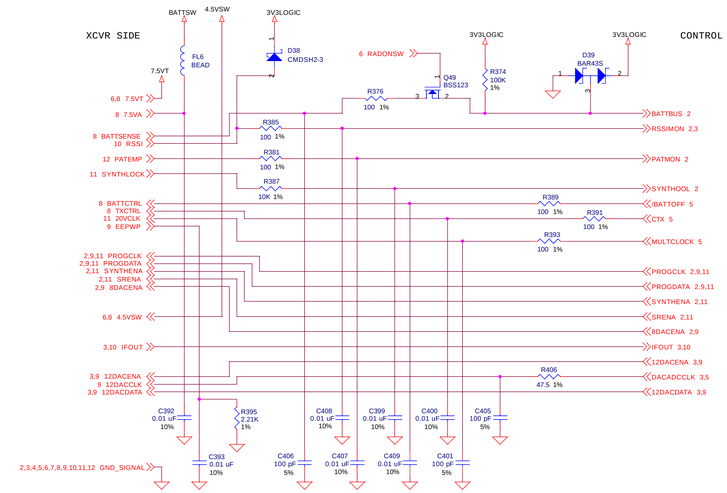

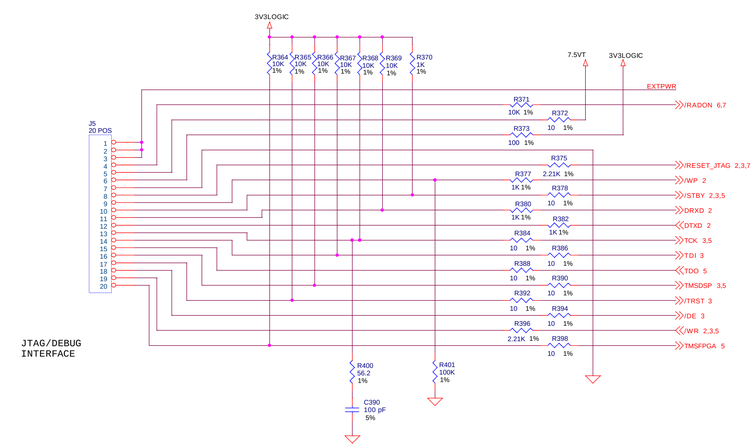

THALES COMMUNICATIONS, INC.
This information represents intellectual property which shall not be disclosed or released, except to comply with contractual requirements. This information is provided on a limited basis and does not include any rights to manufacture, or have manufactured, any equipment depicted therein.

SOFTWARE VERSION	Orcad Capture 7.00		
FILENAME	07160101.DSN		
REVISION	-	REV STATUS OF SHEETS	
SHEETS	6 5 4 3 2 1		

ELEC ENG.		
MECH ENG.		
QA		
MFG/TEST ENG		
TECH DIR		
DSGNR		
ADDITIONAL APPROVALS	DATE	

PART DASH NO.	NEXT ASSY	USED ON
	4101421	DATRON
	APPLICATION	

UNLESS OTHERWISE SPECIFIED DIMENSIONS ARE IN INCHES TOLERANCES ARE:
FRACTIONS +/- DECIMALS .XX +/- .XXX +/- ANGLES +/-
DO NOT SCALE DRAWING
TREATMENT
FINISH
SIMILAR TO

CONTRACT NO.

APPROVALS	DATE
DRAWN E. HOOKER	07/20/00
CHECKED	

THALES — THALES COMMUNICATIONS, INC. ROCKVILLE, MARYLAND

TITLE
SCHEMATIC DIAGRAM, CCA CONTROL/TRANSCEIVER

SIZE	CAGE CODE	DWG NO	REV
D	23386	4200716	02

SCALE NONE — Thursday, November 15, 2001 — SHEET 1 OF 12

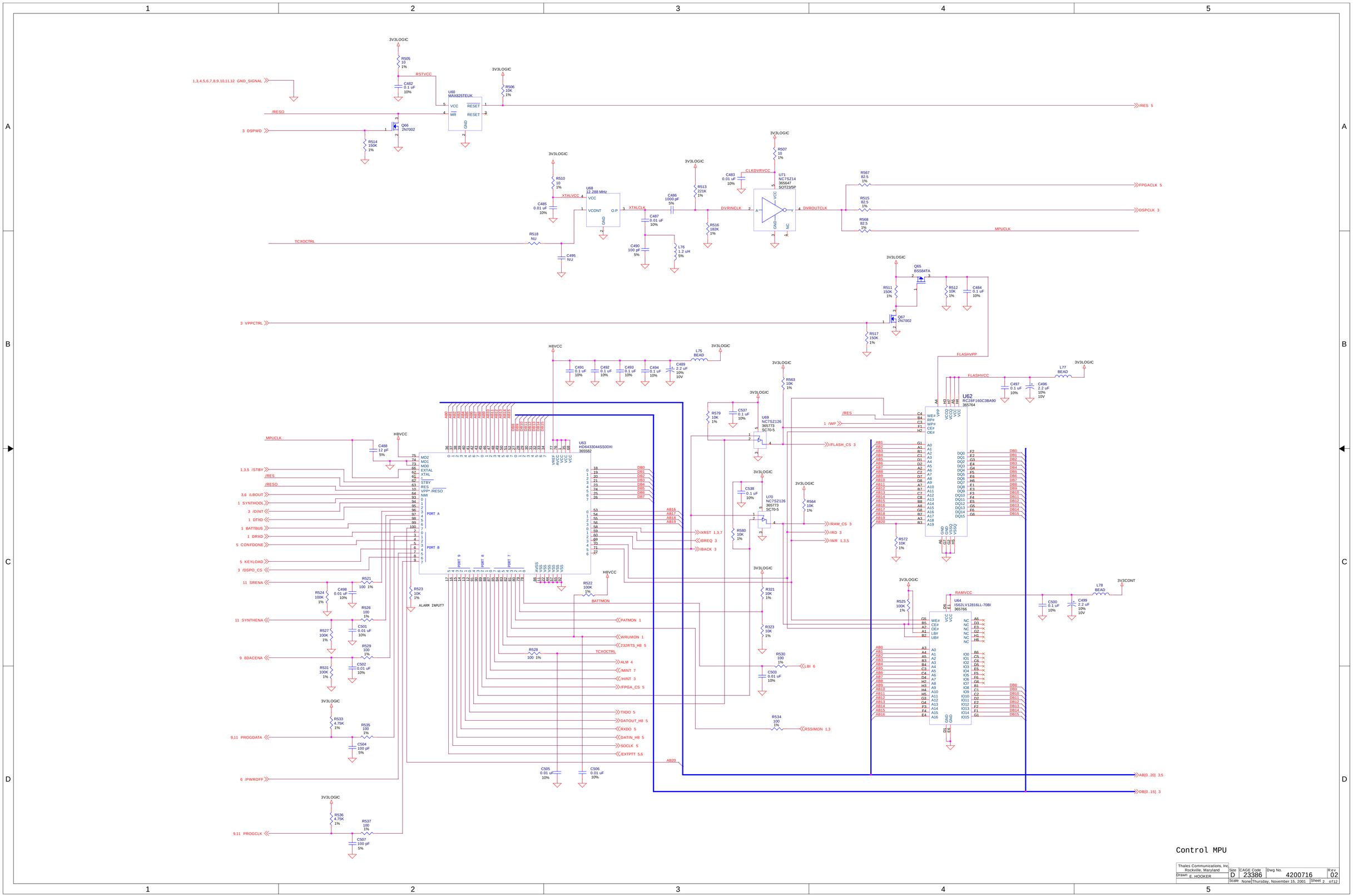

Control MPU

Thales Communications, Inc. Rockville, Maryland	Size D	CAGE Code 23386	Dwg No. 4200716	Rev 02
Drawn E. HOOKER	Scale None	Thursday, November 15, 2001	Sheet 2 of 12	

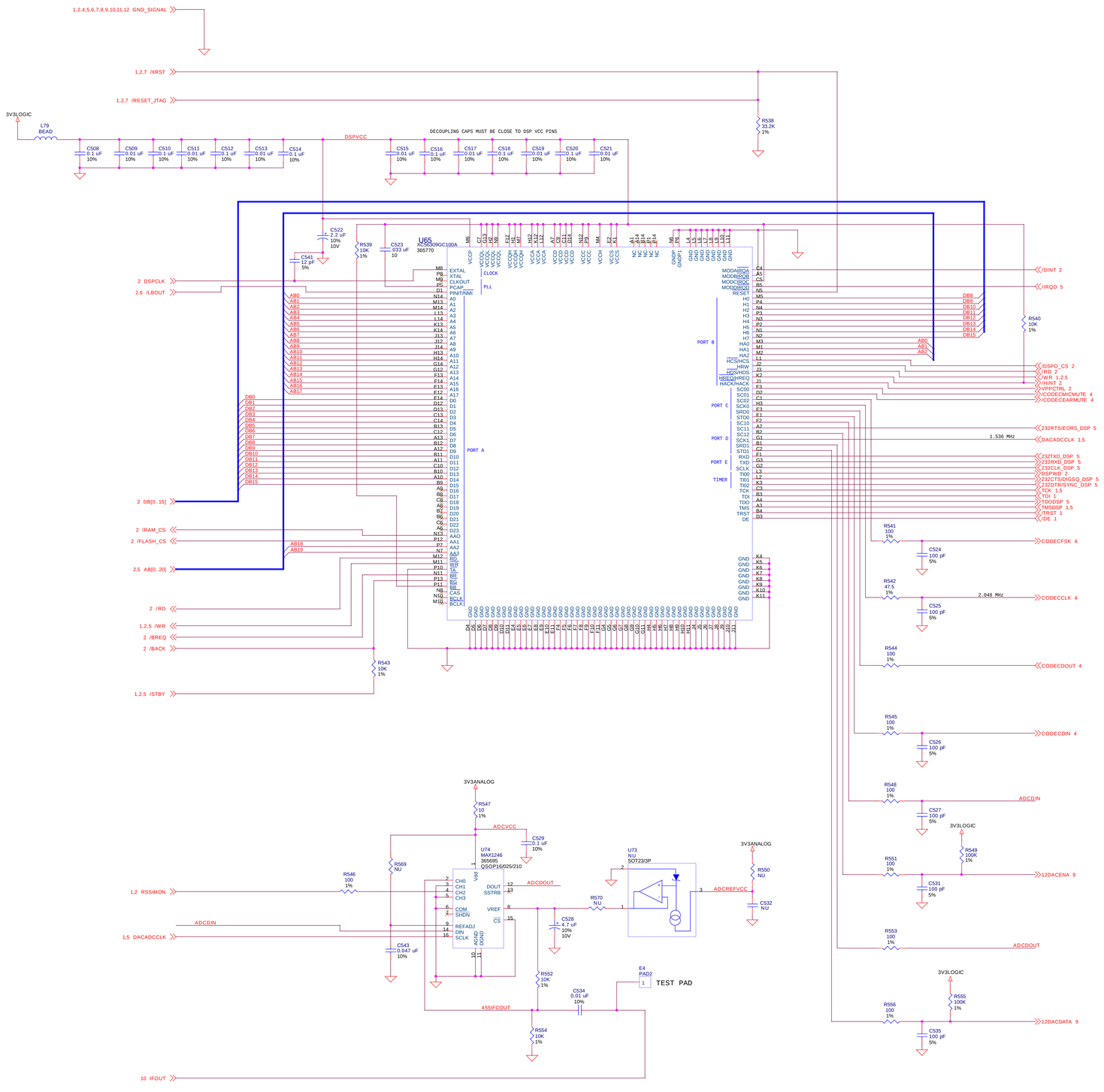

Control DSP

Thales Communications, Inc. Rockville, Maryland	Size D	CAGE Code 23386	Dwg No. 4200716	Rev 02
Drawn E. HOOKER				
	Scale None	Thursday, November 15, 2001	Sheet 3 of 12	

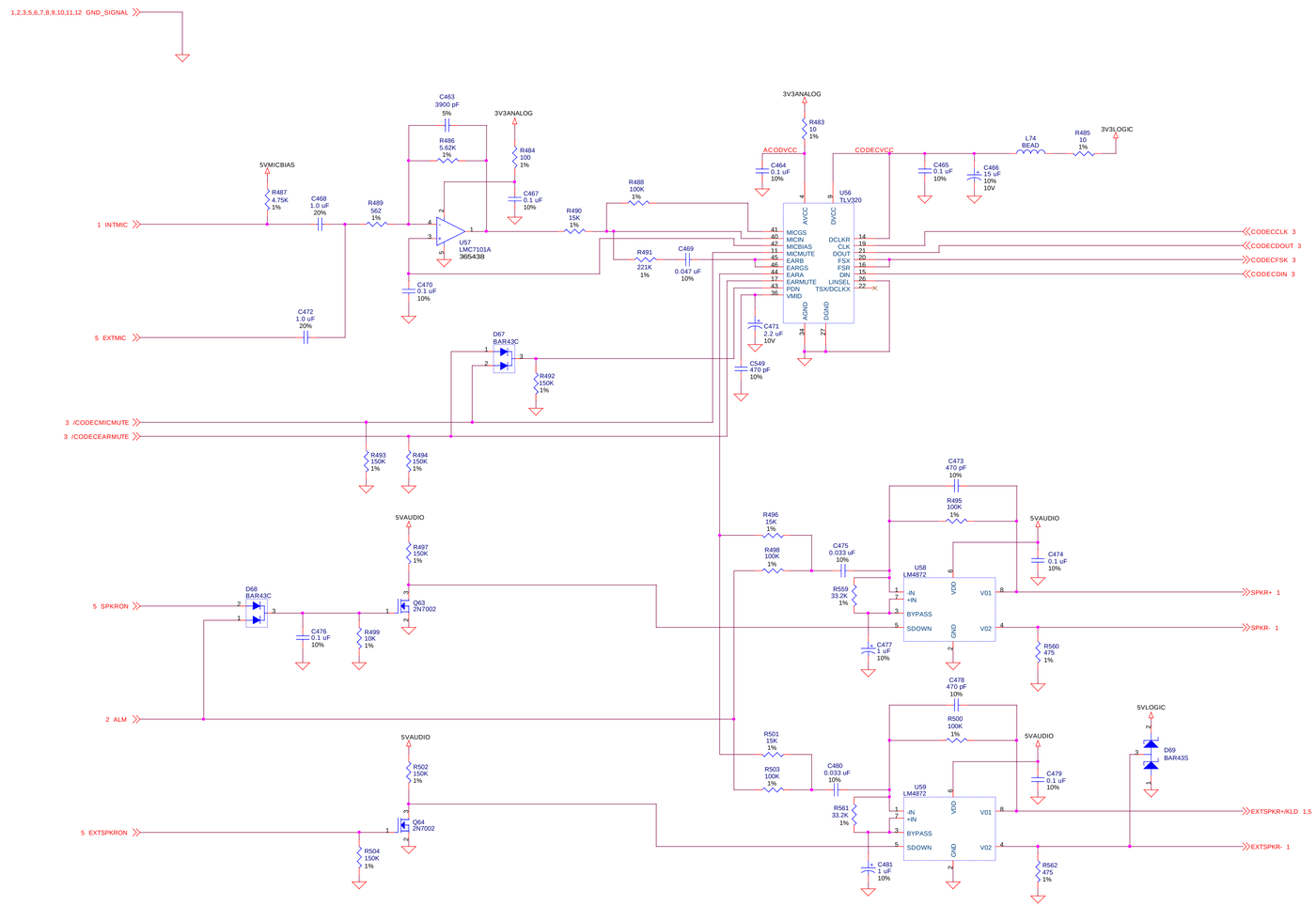

Control Audio

Thales Communications, Inc. Rockville, Maryland	Size	CAGE Code	Dwg No.		Rev
Drawn E. HOOKER	D	23386	4200716		02
	Scale None	Thursday, November 15, 2001	Sheet 4 of 12		

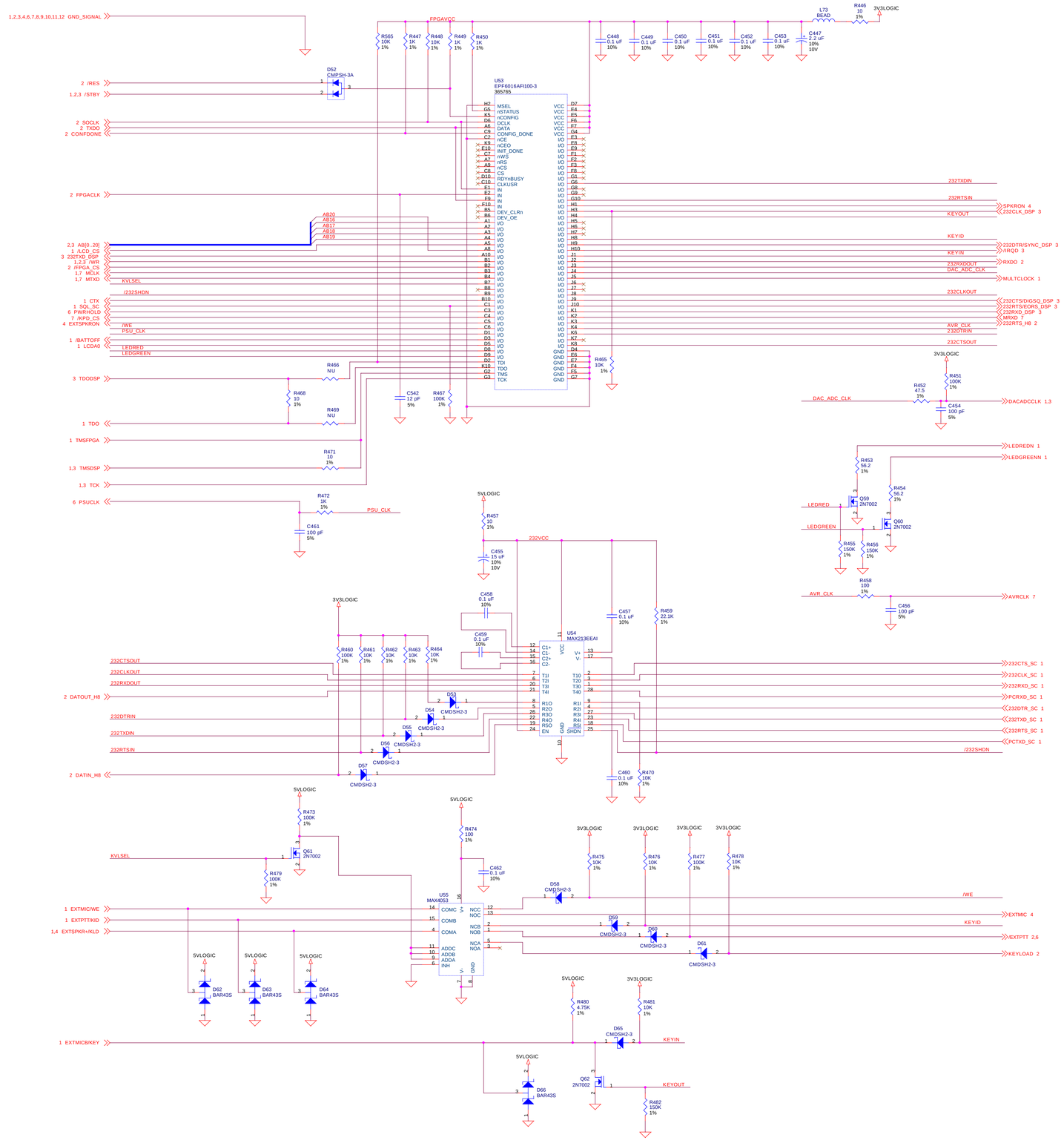

Control FPGA

Thales Communications, Inc. Rockville, Maryland	Size D	CAGE Code 23386	Dwg No. 4200716	Rev 02
Drawn E. HOOKER	Scale None	Thursday, November 15, 2001	Sheet 5 of 12	

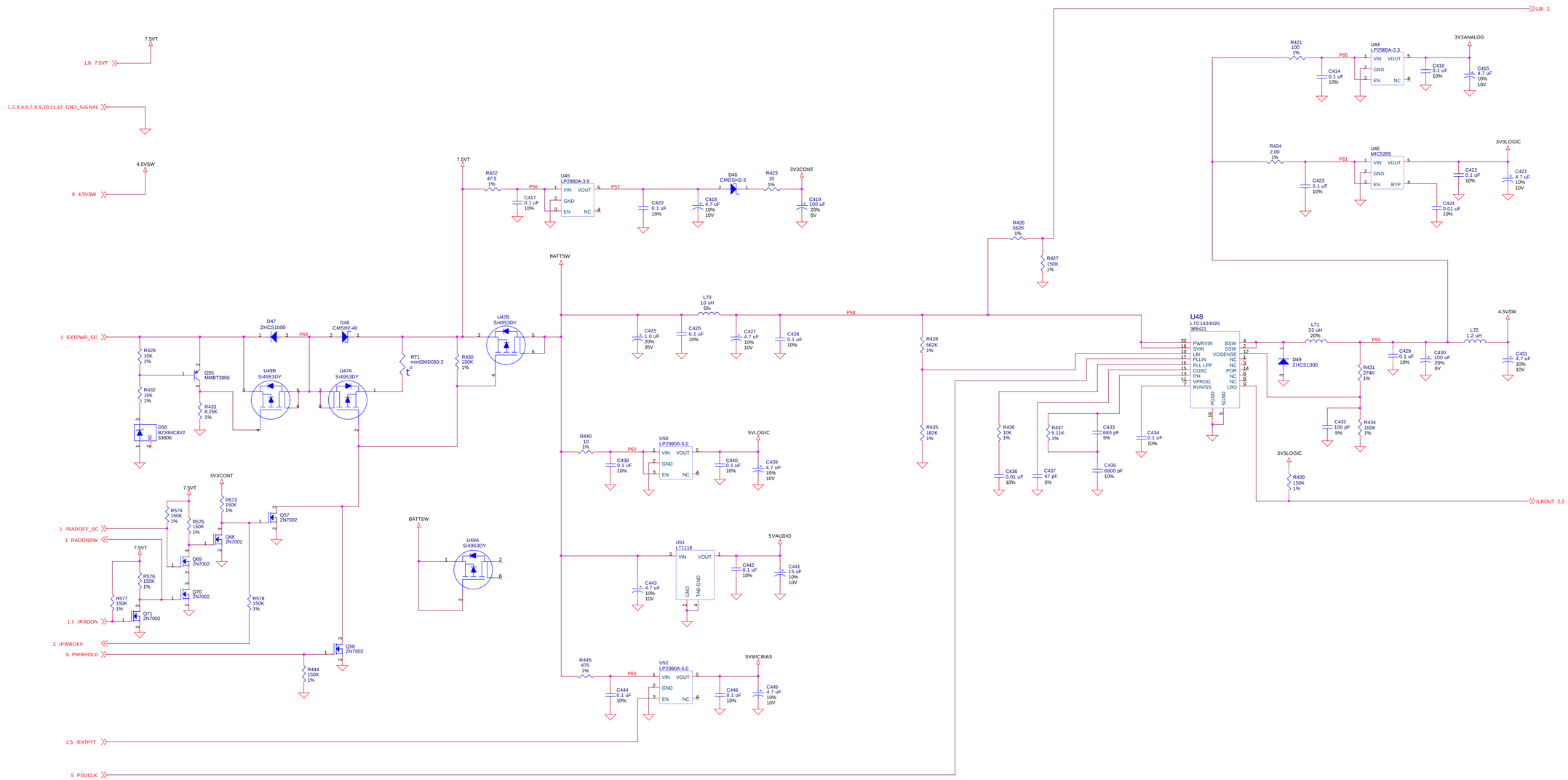

Control Power

Thales Communications, Inc. Rockville, Maryland	Size D	CAGE Code 23386	Dwg No. 4200716	Rev 02
Drawn E. HOOKER	Scale None	Thursday, November 15, 2001	Sheet 6 of 12	

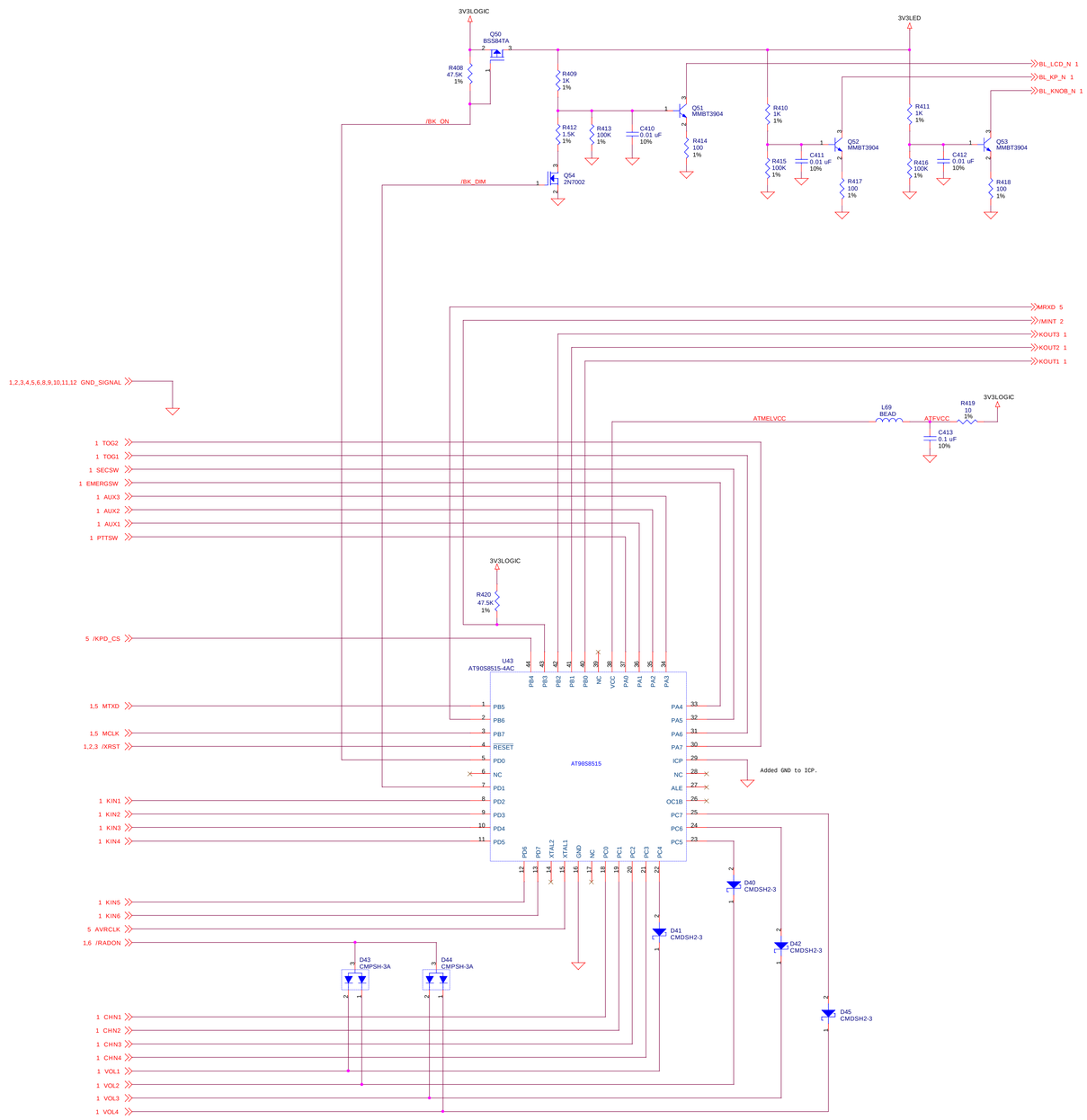

Control Keypad

Thales Communications, Inc. Rockville, Maryland	Size	CAGE Code	Dwg No.	Rev
Drawn E. HOOKER	D	23386	4200716	02
	Scale None	Thursday, November 15, 2001	Sheet 7 of 12	

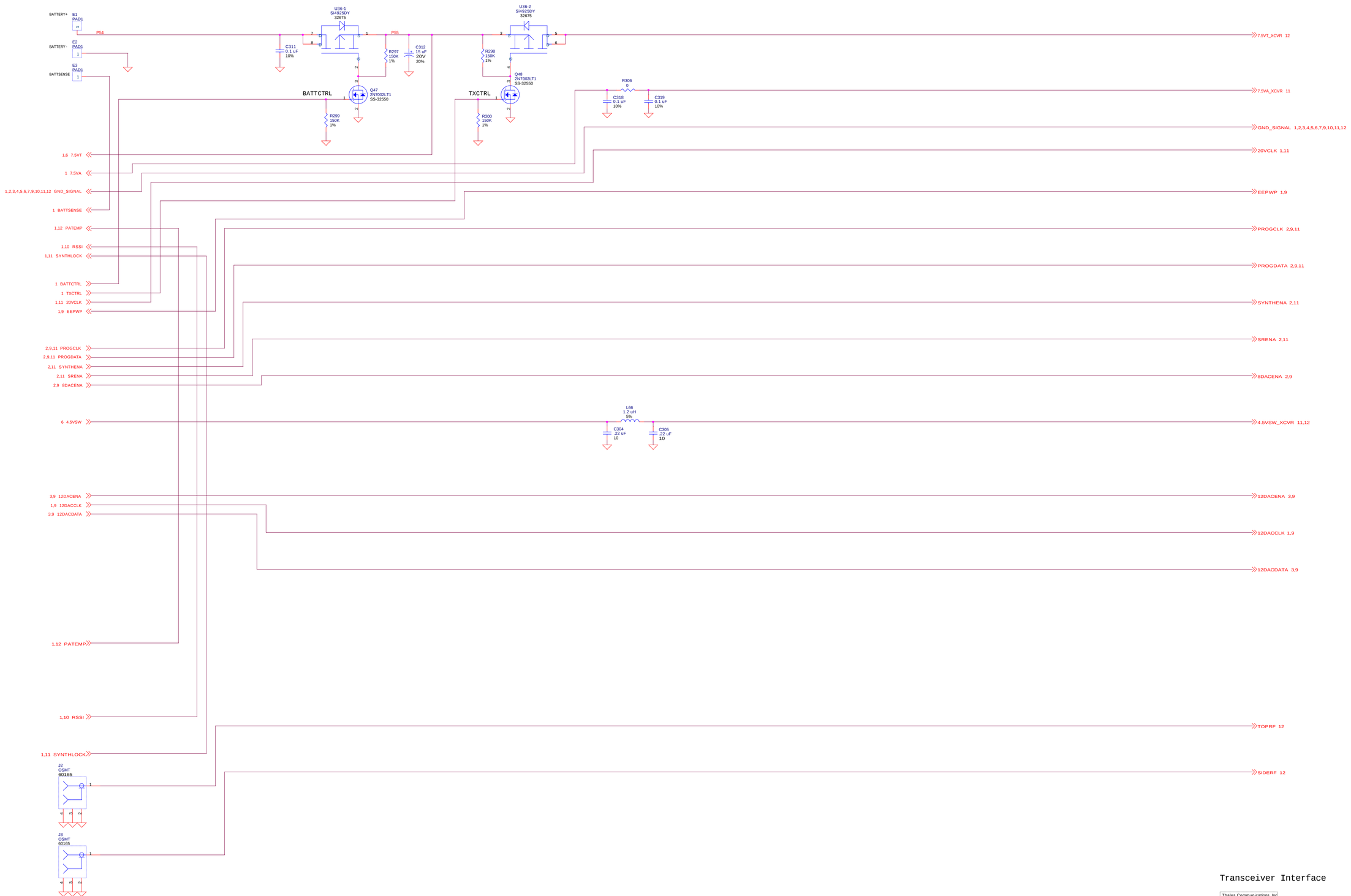

Transceiver Interface

Thales Communications, Inc. Rockville, Maryland	Size D	CAGE Code 23386	Dwg No. 4200716	Rev 02
Drawn E. HOOKER	Scale None	Thursday, November 15, 2001	Sheet 8 of 12	

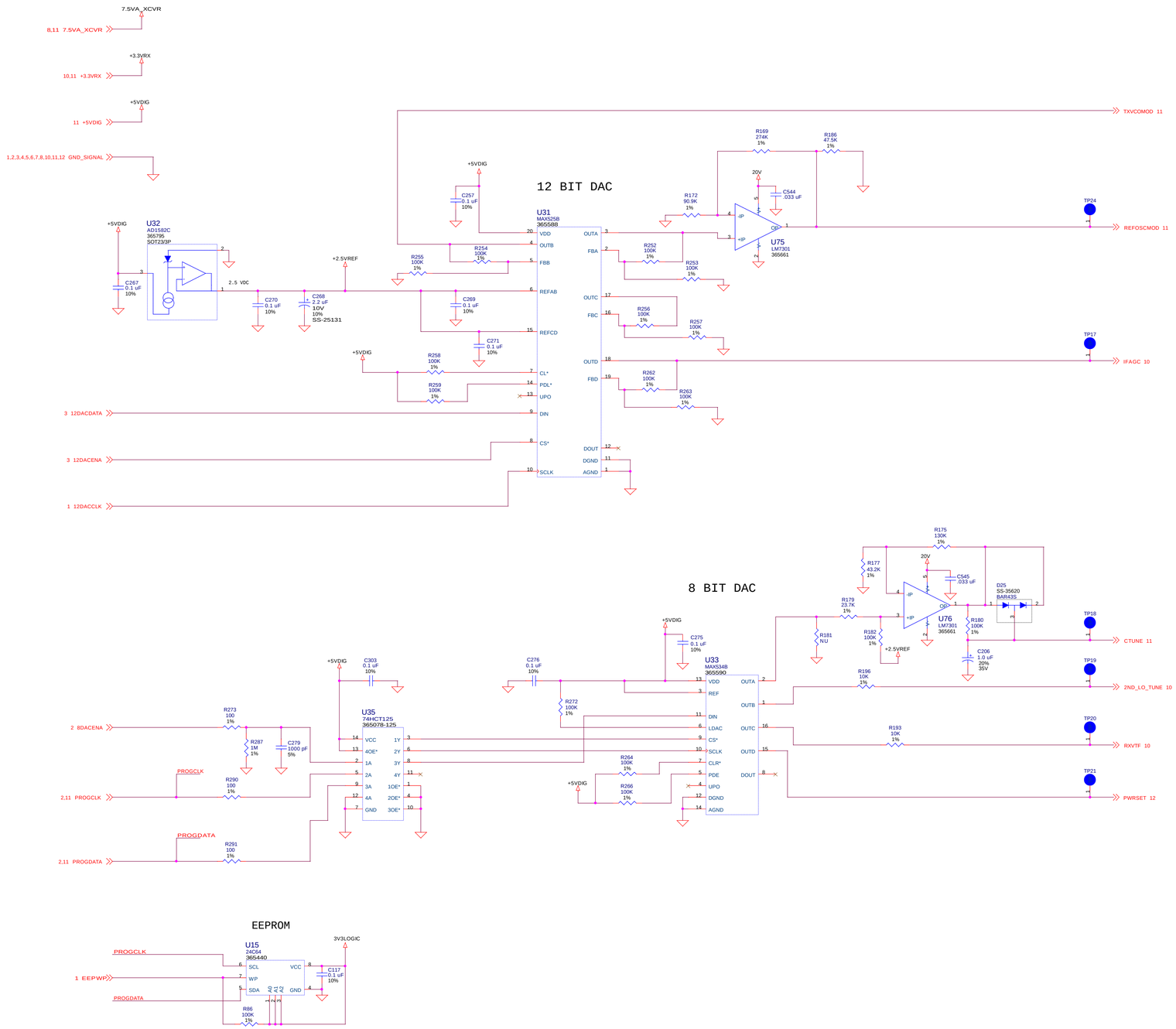

Transceiver DACs

Thales Communications, Inc. Rockville, Maryland	Size D	CAGE Code 23386	Dwg No. 4200716	Rev 02
Drawn E. HOOKER	Scale None	Thursday, November 15, 2001	Sheet 9 of 12	

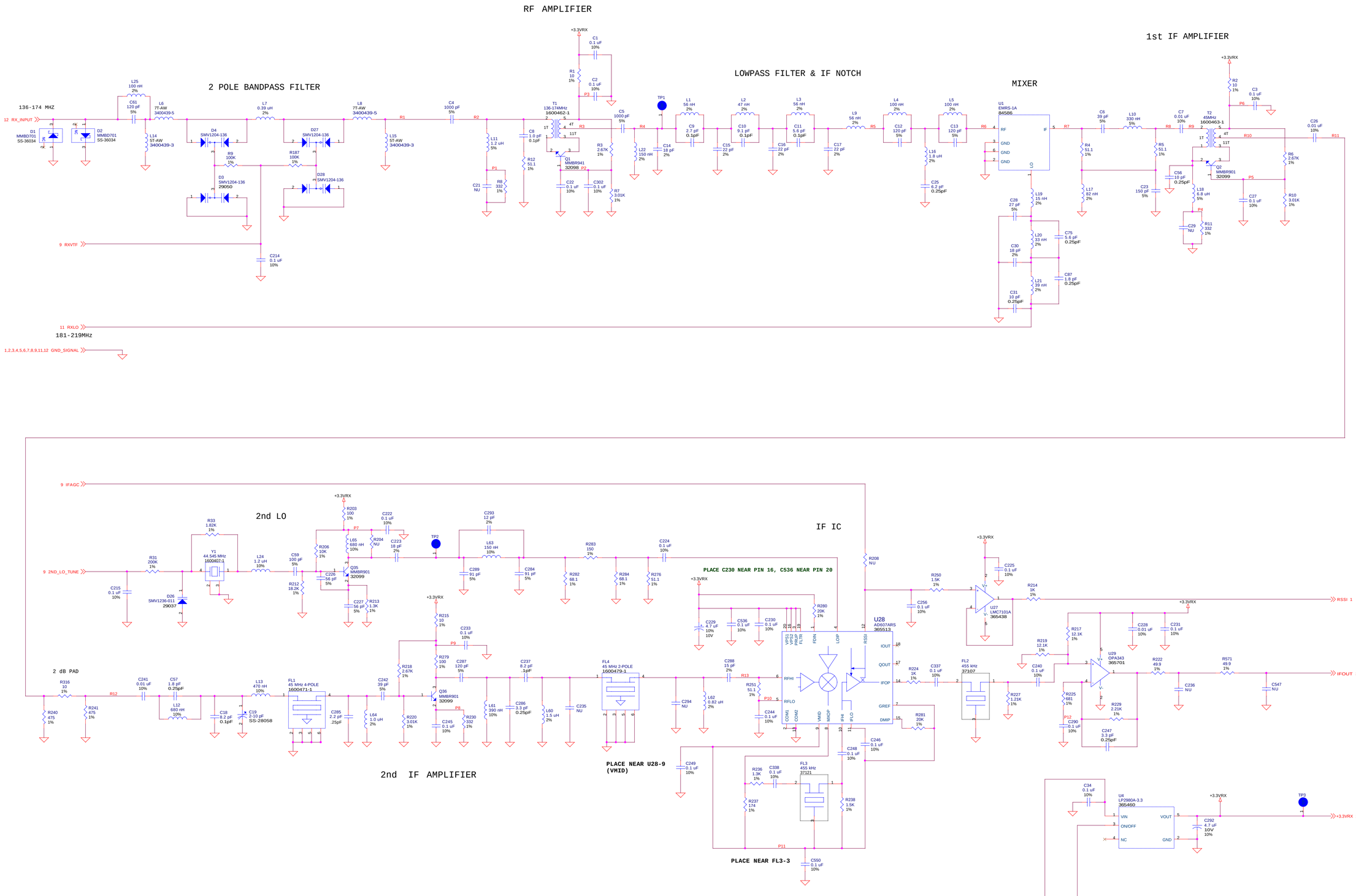
RF AMPLIFIER
2 POLE BANDPASS FILTER
LOWPASS FILTER & IF NOTCH
MIXER
1st IF AMPLIFIER
136-174 MHZ
181-219MHz
12 RX_INPUT
9 RXVTF
11 RXLO
1,2,3,4,5,6,7,8,9,11,12 GND_SIGNAL
+3.3VRX
T1 136-174MHz 1600462-1
Q1 MMBR941 32098
U1 EMRS-1A 84586
T2 45MHz 1600463-1
Q2 MMBR901 32099
9 IFAGC
2nd LO
IF IC
2 dB PAD
2nd IF AMPLIFIER
9 2ND_LO_TUNE
Y1 44.545 MHz 1600607-1
Q35 MMBR901 32099
Q36 MMBR901 32099
FL1 45 MHz 4-POLE 1600471-1
FL4 45 MHz 2-POLE 1600479-1
FL2 455 kHz 37107
FL3 455 kHz 37121
PLACE C230 NEAR PIN 16, C536 NEAR PIN 20
PLACE NEAR U28-9 (VMID)
PLACE NEAR FL3-3
U28 AD607ARS 365513
U27 LMC7101A 365438
U29 OPA343 365701
U4 LP2980A-3.3 365460
RSSI 1
IFOUT 3
12 RXSINK
11 +3.3VRXEN
+3.3VRX 11
Transceiver Receiver
Thales Communications, Inc
Rockville, Maryland
Drawn E. HOOKER
Size D
CAGE Code 23386
Dwg No. 4200716
Rev 02
Scale None
Thursday, November 15, 2001
Sheet 10 of 12

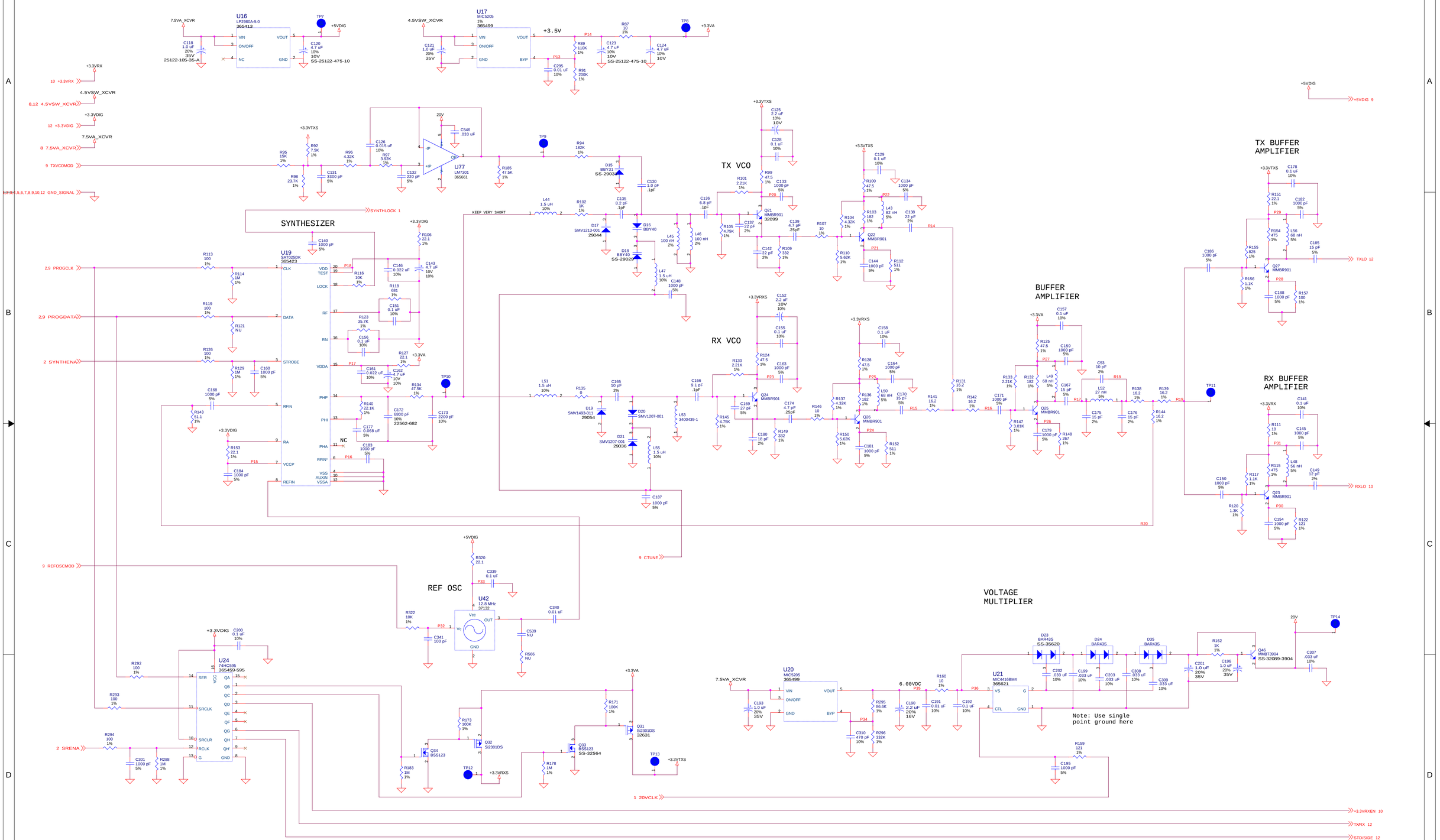
U16
LP2980A-5.0
365413
U17
MIC5205
365499
U77
LM7301
365661
U19
SA7025DK
365423
SYNTHESIZER
TX VCO
RX VCO
TX BUFFER AMPLIFIER
BUFFER AMPLIFIER
RX BUFFER AMPLIFIER
REF OSC
U42
12.8 MHz
37132
U24
74HC595
365459-595
U20
MIC5205
365499
U21
MIC4416BM4
365621
VOLTAGE MULTIPLIER
Note: Use single point ground here
Transceiver Synthesizer
Thales Communications, Inc
Rockville, Maryland
Drawn E. HOOKER
Size D
CAGE Code 23386
Dwg No. 4200716
Rev 02
Scale None
Thursday, November 15, 2001
Sheet 11 of12

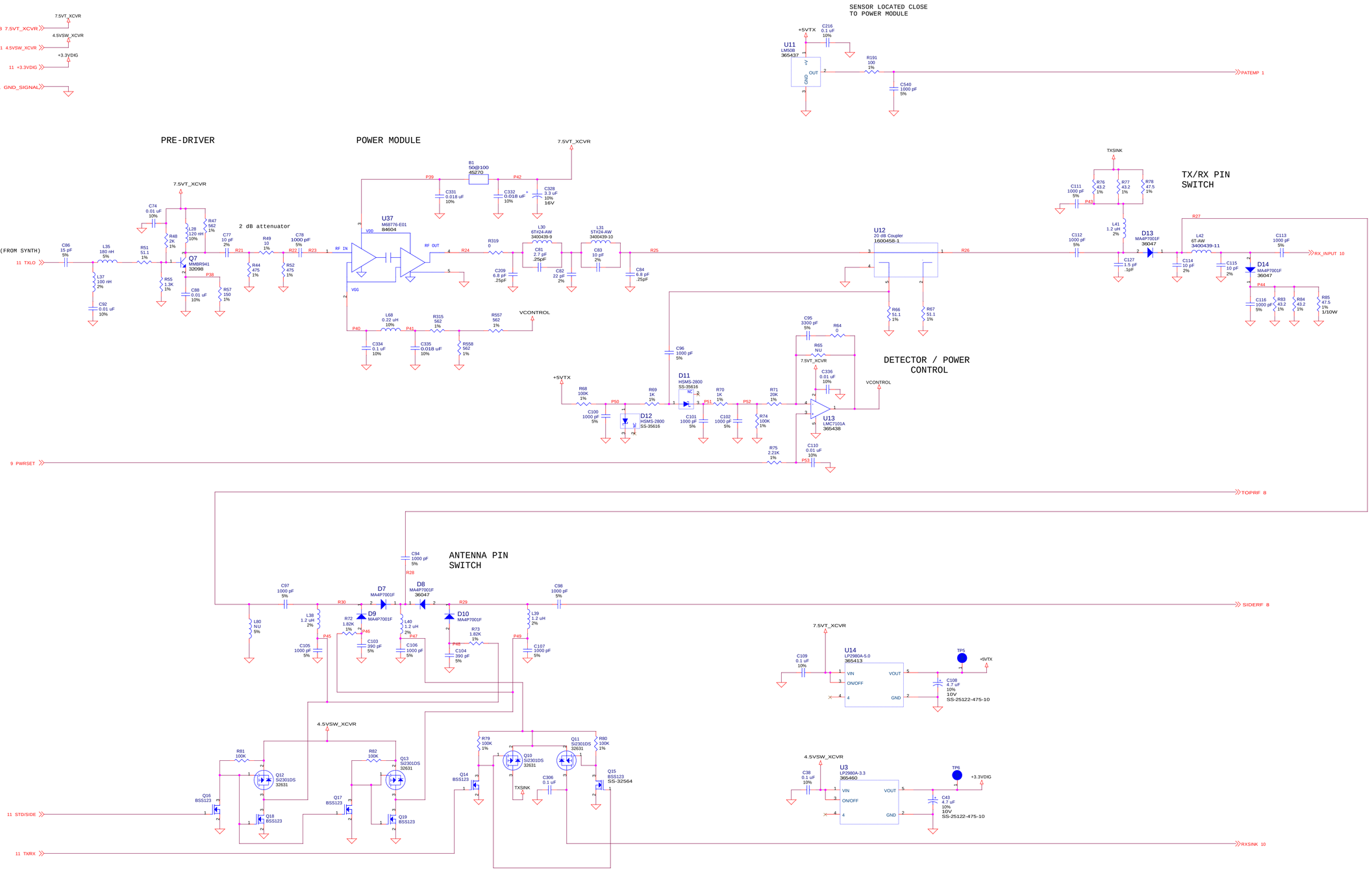

Transceiver Transmitter

Thales Communications, Inc. Rockville, Maryland	Size D	CAGE Code 23386	Dwg No. 4200716	Rev 02
Drawn E. HOOKER	Scale None	Thursday, November 15, 2001	Sheet 12 of 12	

REV	ECN	DESCRIPTION		DATE	APPR
Q1	NONE	PROTOTYPE		04-12-01	
Q2	NONE	REDLINE CHANGES	WS	04/25/01	
Q3	NONE	REDLINE CHANGES	WS	05-10-01	
Q4	NONE	REDLINE CHANGES			
Q5	NONE	REDLINE CHANGES	WS	9/14/01	

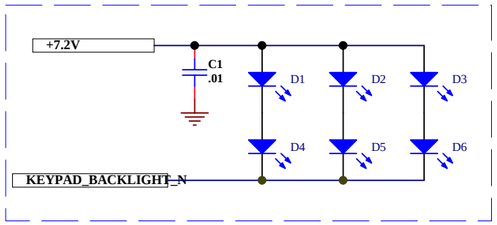

PART OF LCD MODULE 320803

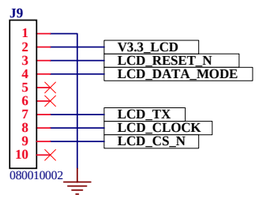

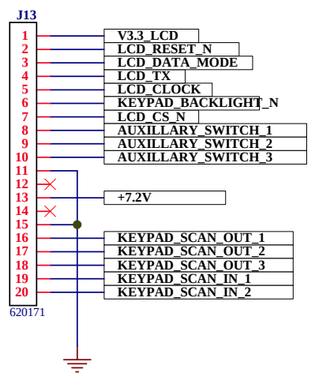

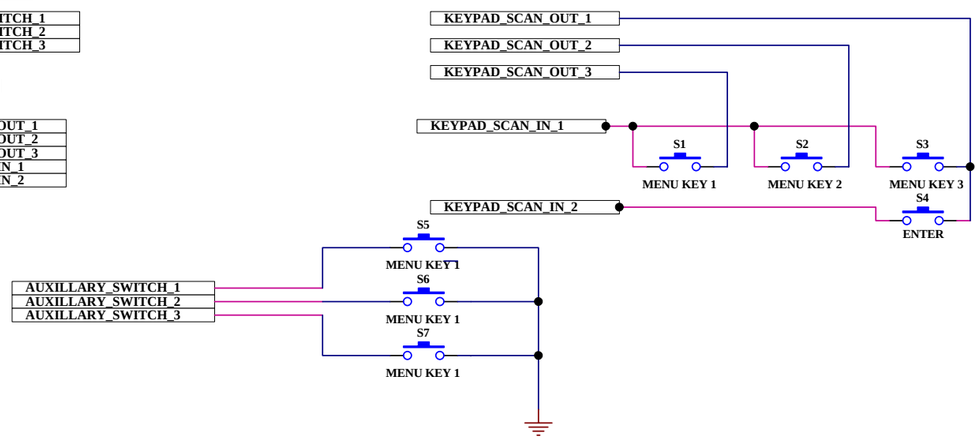

DATRON WORLD COMMUNICATIONS INC.
3030 Enterprise Ct.
Vista, CA 92083
(760)597-3777

Title: *Schematic*

SCHEMATIC, KEYPAD/DISPLAY

Size:	Drawn:	Date:	Drawing Number:	Rev:
B	ABE SABET	04-12-01	994466	Q5
	Appr:	Date:		

File: 994466Q5.Sch | Date: 5-Dec-2001 | Time: 15:56:45 | Sheet 1 of 1

REV	ECN	DESCRIPTION	DATE	APPR
A	02-0051	RELEASE		

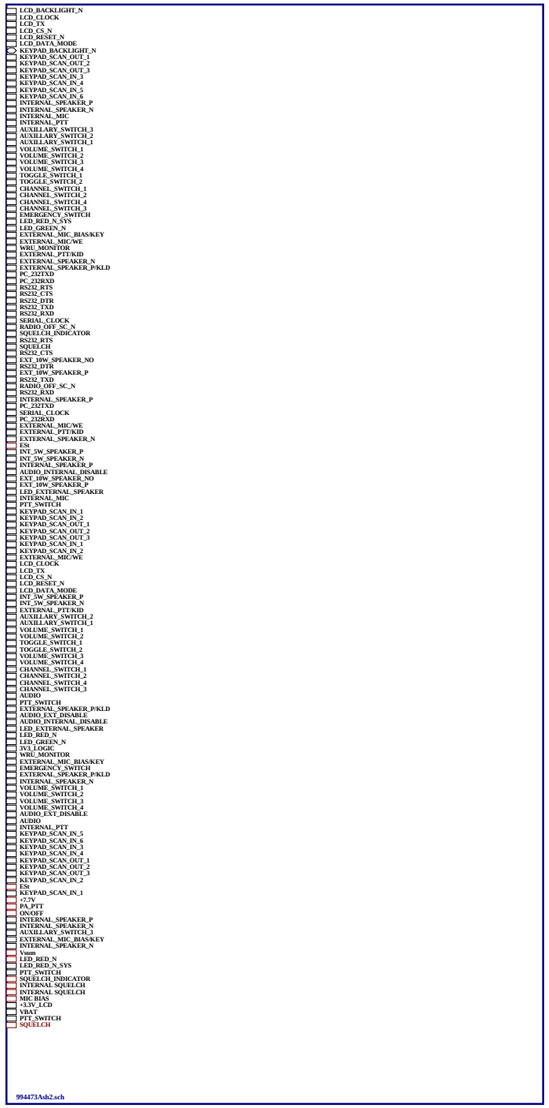

DATRON WORLD COMMUNICATIONS INC.
3030 Enterprise Ct.
Vista, CA 92083
(760)597-3777

Title: *Schematic*

GUARDIAN MOBILE, MOTHERBOARD

Size:	Drawn:	Date:	Drawing Number:	Rev:
D	Appr:	Date:	994473A	A

File: 994473Ash1.SCH Date: 8-Feb-2002 Time: 13:48:52 Sheet 1 of 3

REV	ECN	DESCRIPTION	DATE	APPR

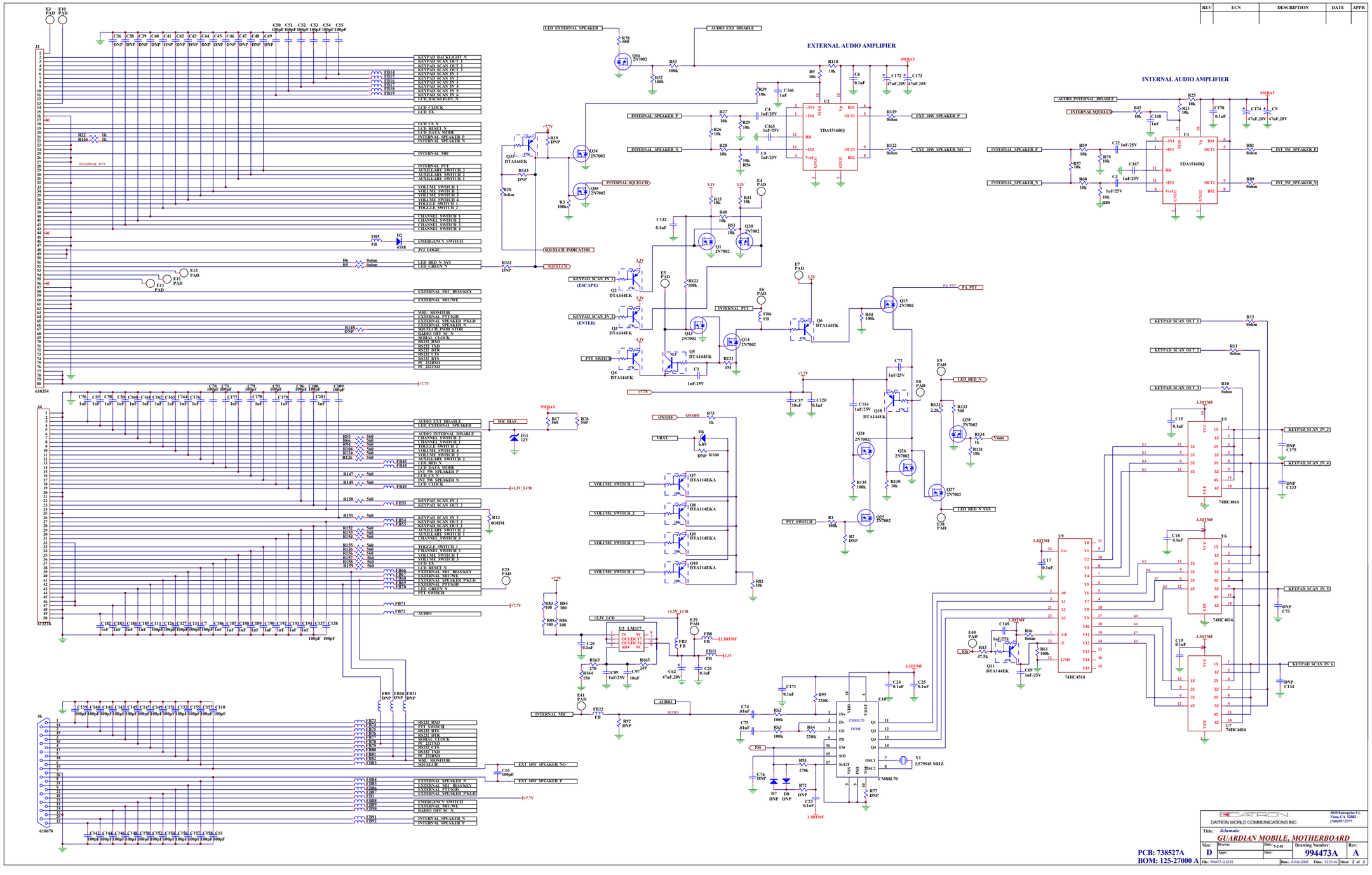

REV	ECN	DESCRIPTION	DATE	APPR

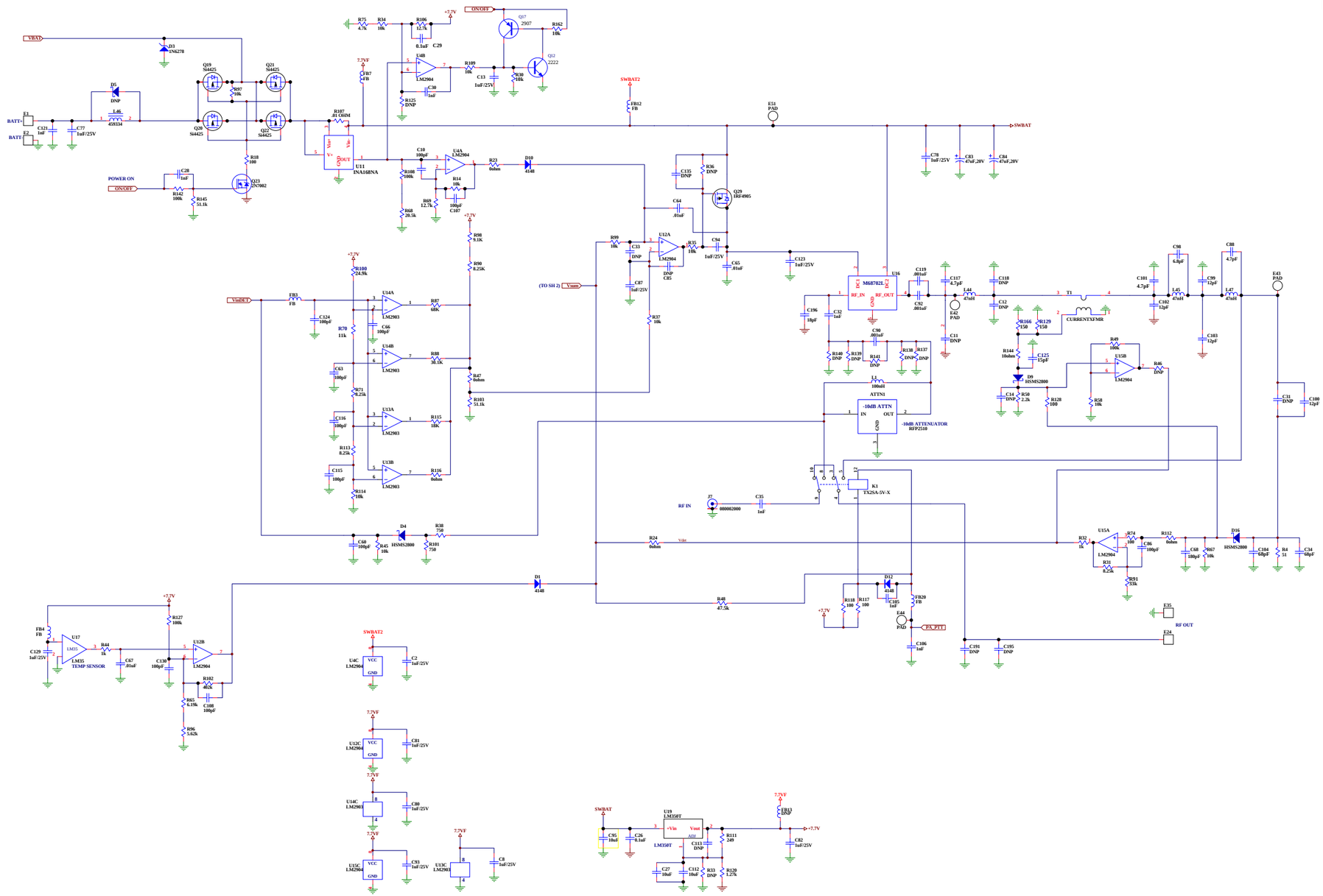

PCB: 738527A

BOM: 125-27000A

3038 Enterprise Ct.
Vista, CA 92083
(760)597-3777

Title: *Schematic*

GUARDIAN MOBILE, MOTHERBOARD

Size:	Drawn:	Date:	Drawing Number:	Rev:
D	Appr:	Date:	994473A	A

File: 994473Ash3.sch Date: 8-Feb-2002 Time: 13:54:12 Sheet 3 of 3

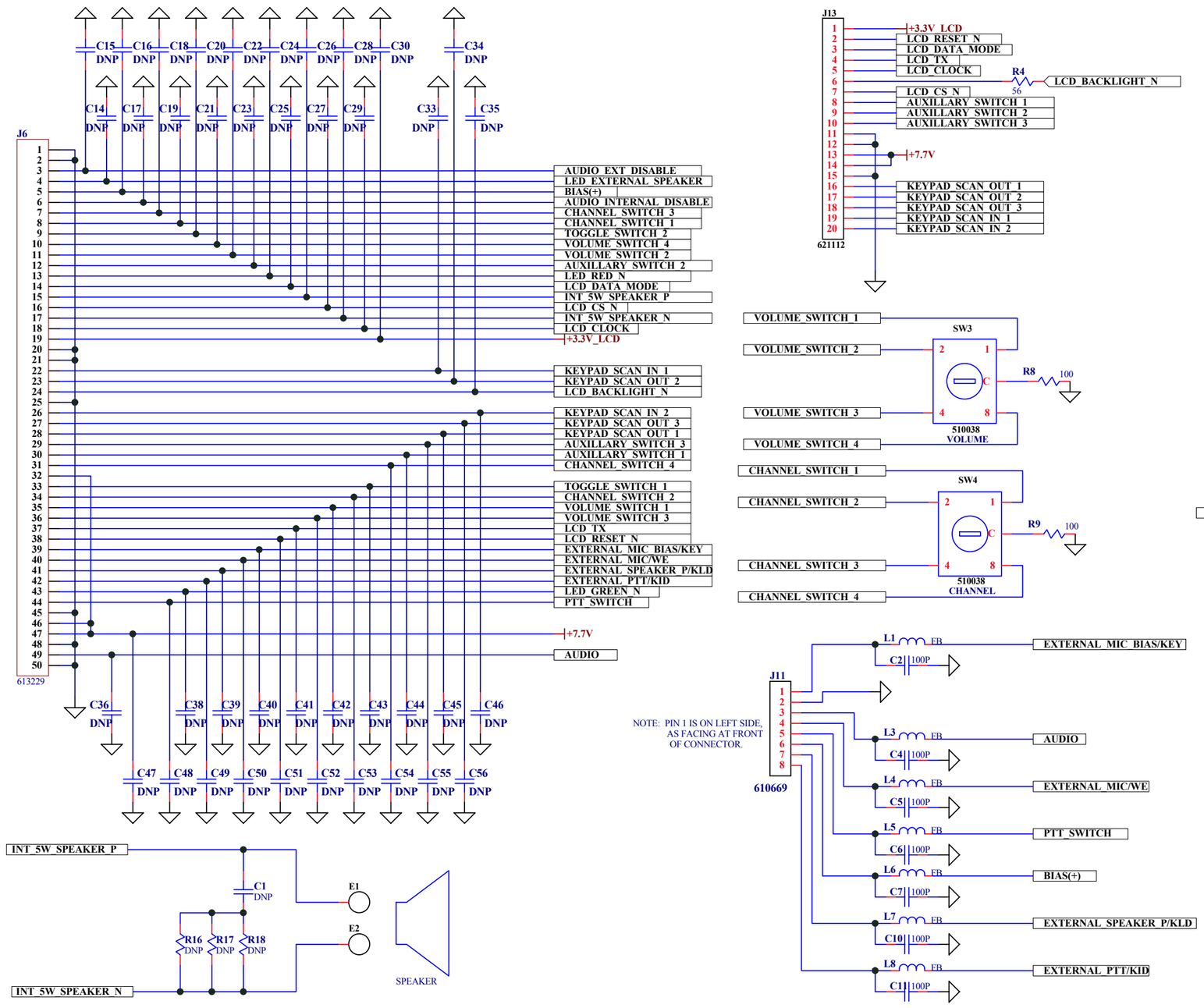

REV	ECN	DESCRIPTION		DATE	APPR
Q1	NONE	PROTOTYPE		04-12-01	
Q2	NONE	REDLINE CHANGE UPDATE	WS	4-25-01	
Q3	NONE	REDLINE CHANGE UPDATE	WS	5-10-01	
Q4	NONE	REDLINE CHANGE UPDATE	WS	5-23-01	
Q5	NONE	REDLINE CHANGE UPDATE	WS		
Q6	NONE	REDLINE CHANGE UPDATE	BB	09-12-01	
Q7	NONE	REDLINE CHANGE UPDATE	BB	09-26-01	
Q8	NONE	REDLINE CHANGE UPDATE	BB	11-01-01	
Q9	NONE	J6 CHANGED - WAS 769344	BB	11-13-01	

DATRON WORLD COMMUNICATIONS INC.
3030 Enterprise Ct.
Vista, CA 92083
(760)597-3777

Title: *Schematic*

SCHEMATIC, INTERFACE BOARD

Size:	Drawn: BILL BROOKS	Date: 09-12-01	Drawing Number:	Rev:
B	Appr:	Date:	994467	Q9

File: 994467Q9.SCH | Date: 8-Feb-2002 | Time: 16:35:29 | Sheet 1 of 1