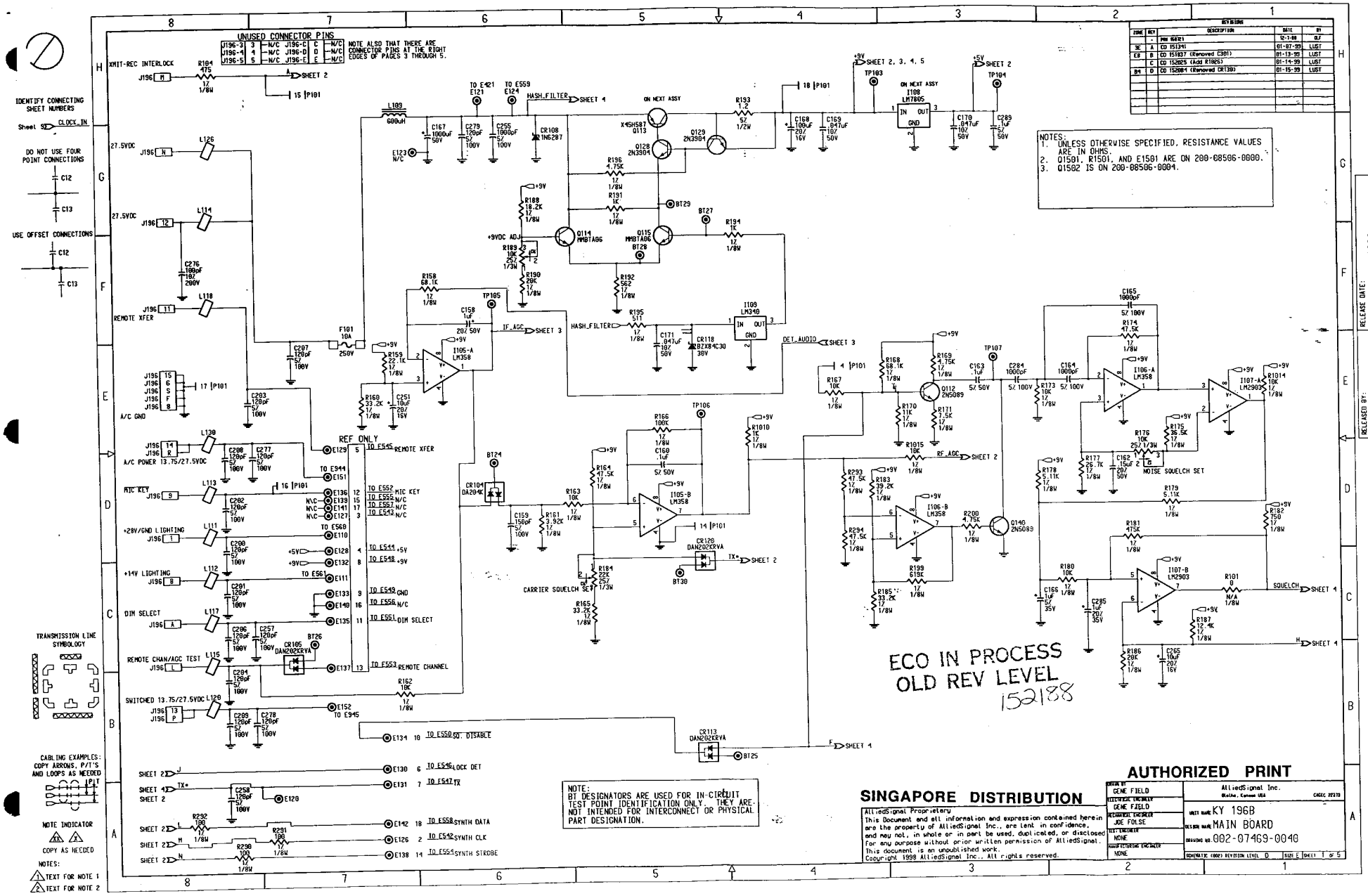
UNUSED CONNECTOR PINS
NOTE ALSO THAT THERE ARE CONNECTOR PINS AT THE RIGHT EDGES OF PAGES 3 THROUGH 5.
REVISIONS
NOTES:
1. UNLESS OTHERWISE SPECIFIED, RESISTANCE VALUES ARE IN OHMS.
2. Q1501, R1501, AND E1501 ARE ON 200-08506-0000.
3. Q1502 IS ON 200-08506-0004.
REF ONLY
ECO IN PROCESS
OLD REV LEVEL
152188
NOTE:
BT DESIGNATORS ARE USED FOR IN-CIRCUIT TEST POINT IDENTIFICATION ONLY. THEY ARE NOT INTENDED FOR INTERCONNECT OR PHYSICAL PART DESIGNATION.
SINGAPORE DISTRIBUTION
AUTHORIZED PRINT
AlliedSignal Inc.
UNIT NAME KY 196B
DESIGN NAME MAIN BOARD
DRAWING NO 002-07469-0040
RELEASE DATE: DECEMBER 7,1998
Last Edit JAN 15, 1999, 9:38:16 am
RELEASED BY: GENE FIELD
Edited By Sharon Lust
Monitor Version 10
THIS PAGE PRINTED JAN 15, 1999, 9:39:16 am
Design Pathname SECO/07469004R_-_Esmgc schematic sheet1
Border Rev 02

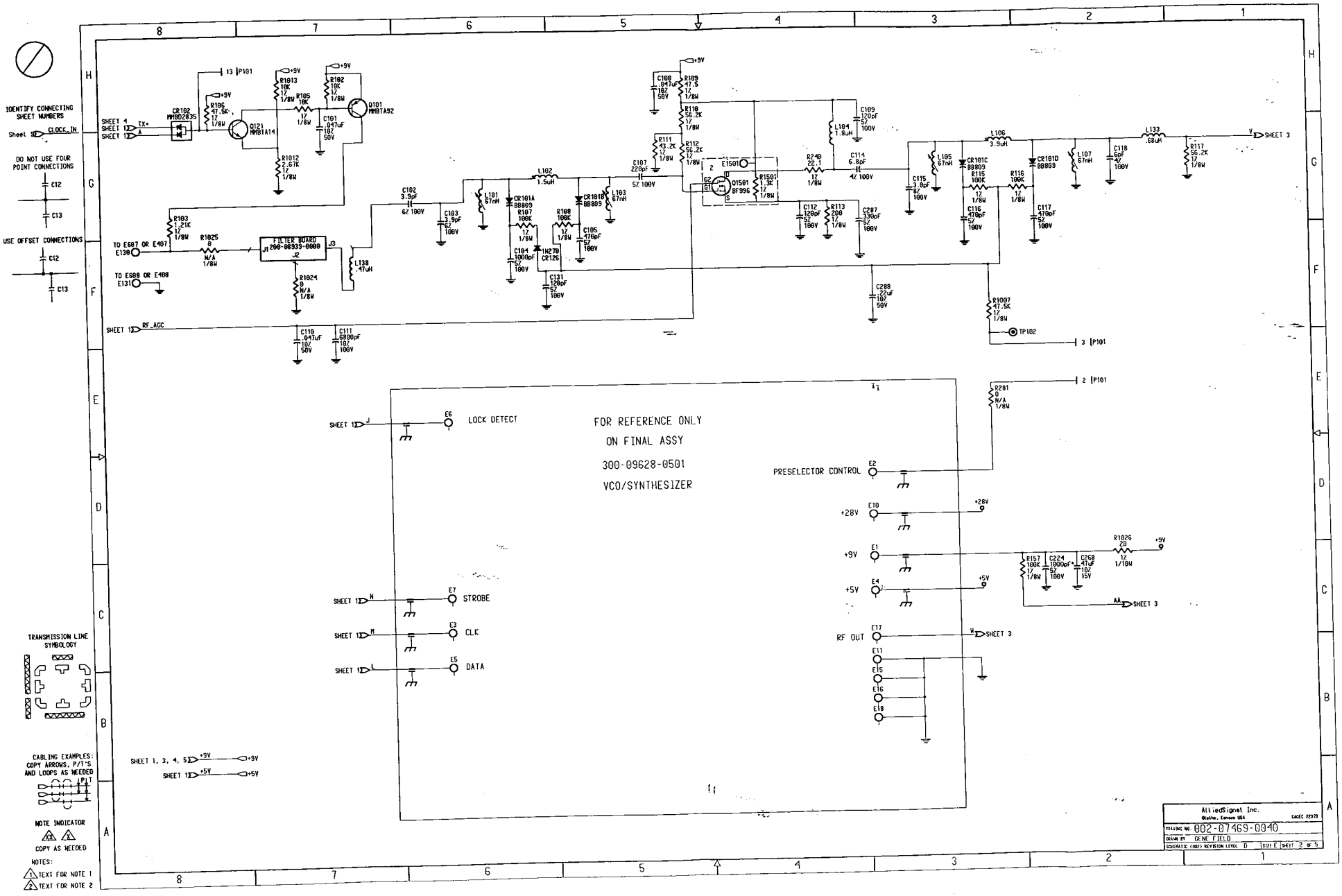

Border Rev 02

Last Edit JAN 15, 1999, 9:38:37 am

Monitor Version 10

Edited By Sharon Lust

THIS PAGE PRINTED JAN 15, 1999, 9:39:20 am

Design Pathname $ECO/07469040R--Esmgc schematic sheet2

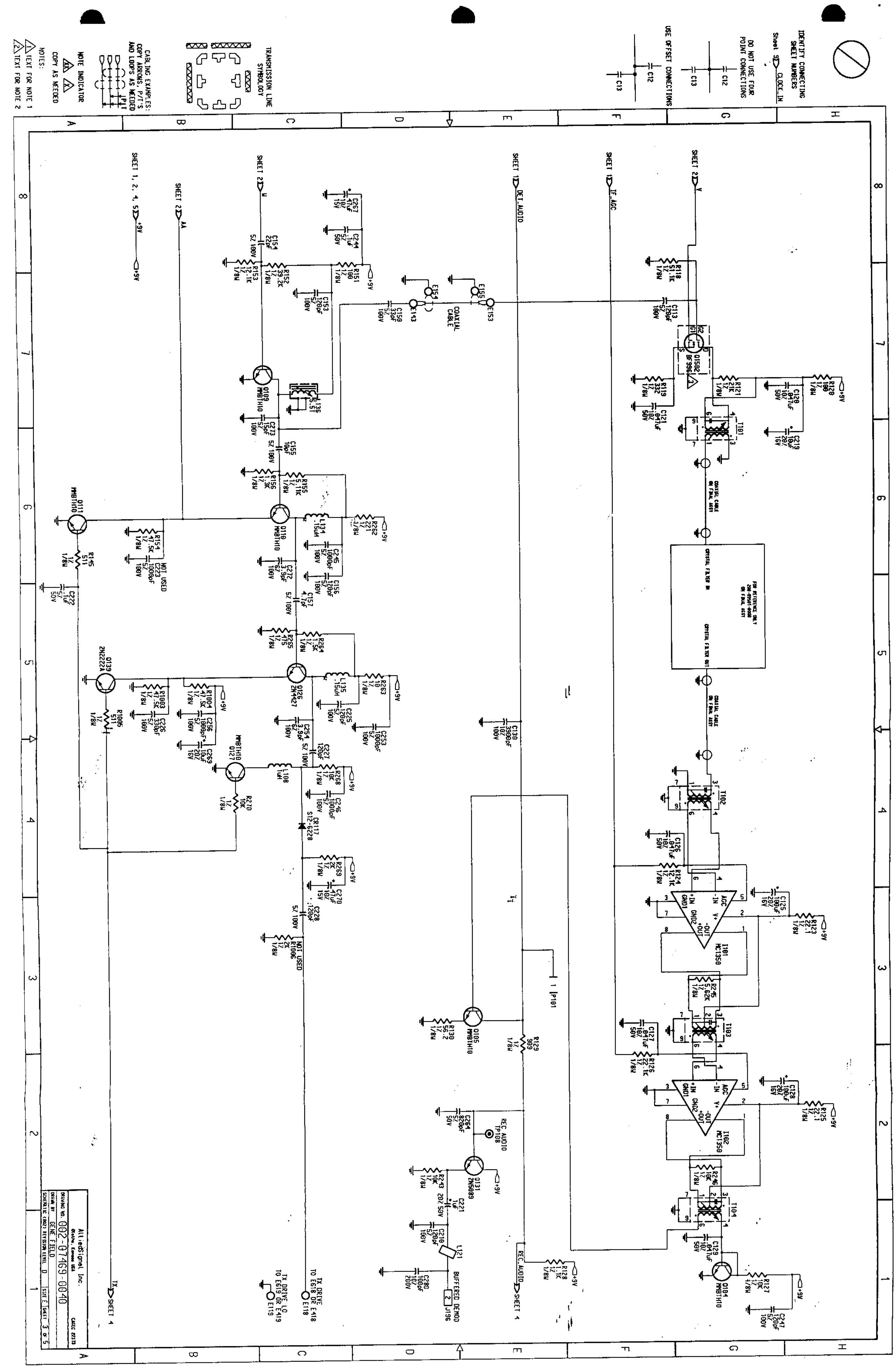

THIS PAGE PRINTED JAN 15, 1999, 9:39:23 am

Design Pathname	Mentor Version	Edited By	Last Edit
$EC0/074690040R_-_Esmgc schematic sheet3	10	Sharon Lust	JAN 15, 1999, 9:38:44 am

Border Rev 02

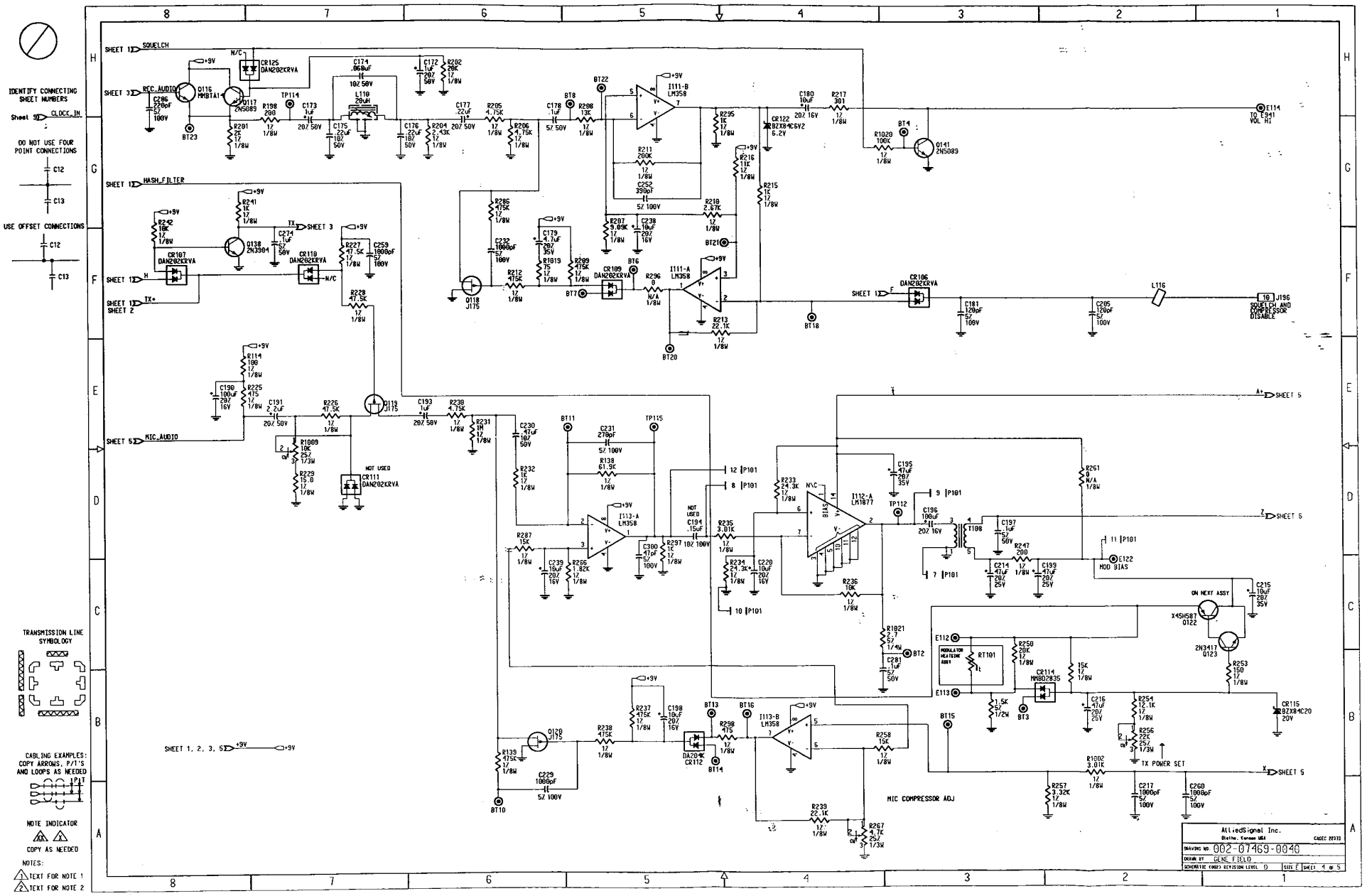
IDENTIFY CONNECTING SHEET NUMBERS
DO NOT USE FOUR POINT CONNECTIONS
USE OFFSET CONNECTIONS
TRANSMISSION LINE SYMBOLOGY
CABLING EXAMPLES: COPY ARROWS, P/T'S AND LOOPS AS NEEDED
NOTE INDICATOR
COPY AS NEEDED
NOTES:
TEXT FOR NOTE 1
TEXT FOR NOTE 2
SHEET 1 SQUELCH
SHEET 3 RCC_AUDIO
SHEET 1 HASH_FILTER
SHEET 5 MIC_AUDIO
SHEET 1, 2, 3, 5
SHEET 5
SHEET 2
TO E941 VOL HI
SQUELCH AND COMPRESSOR DISABLE
MOD BIAS
ON NEXT ASSY
TX POWER SET
MIC COMPRESSOR ADJ
NOT USED
AlliedSignal Inc.
DRAWING NO. 002-07469-0040
DRAWN BY GENE FIELD
SCHEMATIC (ONLY) REVISION LEVEL D
SIZE E SHEET 4 of 5
Design Pathname $ECO/07469004R_-_Esngc schematic sheet4
Mentor Version 10
Edited By Sharon Lust
Last Edit JAN 15, 1999, 9:38:29 am
THIS PAGE PRINTED JAN 15, 1999, 9:39:21 am
Border Rev 02

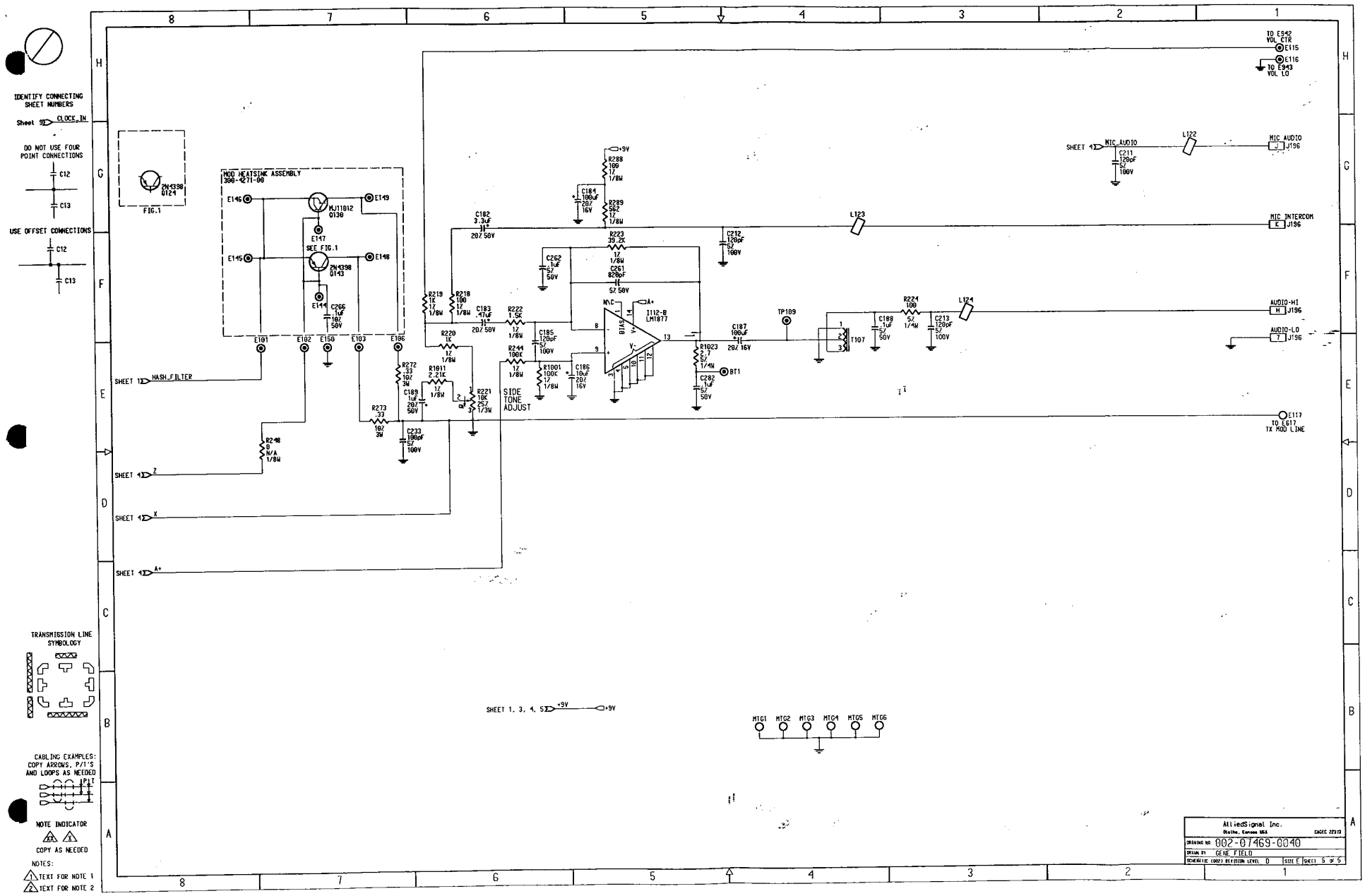

Border Rev 02

Last Edit JAN 15, 1999, 9:38:52 am

Edited By Sharon Lust

Mentor Version 10

THIS PAGE PRINTED JAN 15, 1999, 9:39:18 am

Design Pathname $ECO/07469040R_._Esmgc schemat.ic sheet5

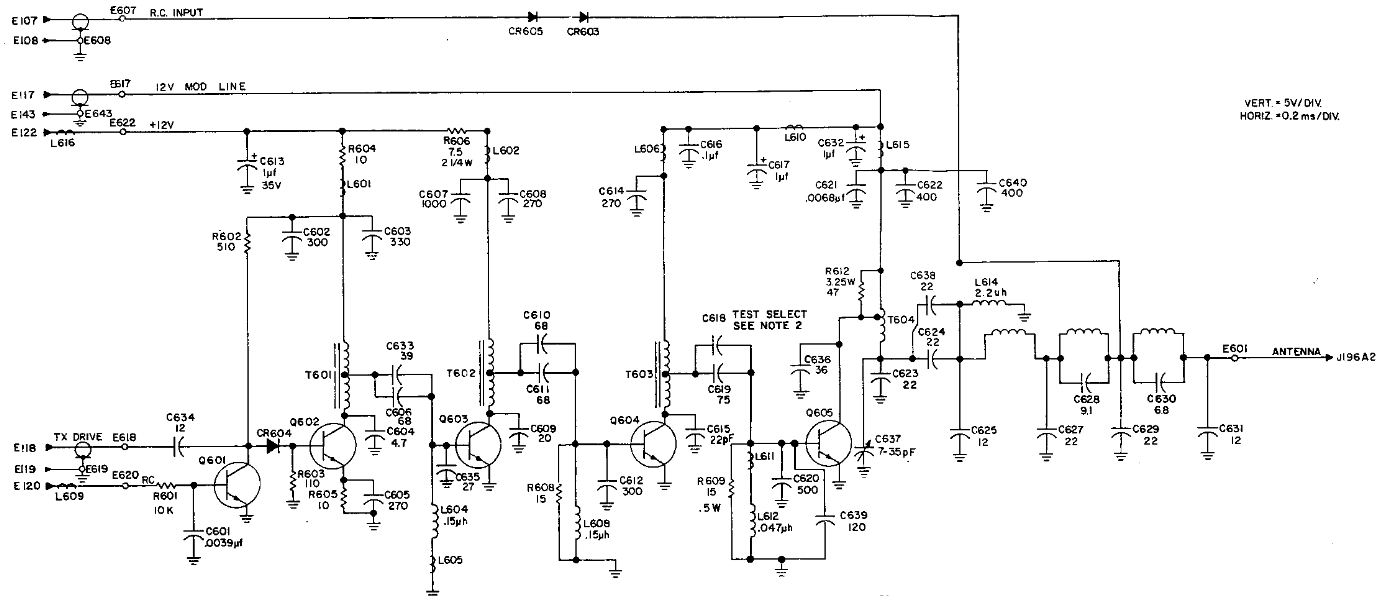

VERT. = 5V/DIV.
HORIZ. = 0.2 ms/DIV.

NOTES:
1. UNLESS NOTED; ALL RESISTANCE VALUES ARE IN OHMS, QW, 5%;
ALL CAPACITANCE VALUES ARE IN PICOFARADS (pF)
2. C618 MAY BE SELECTED FROM THE FOLLOWING VALUES 39 pF, 43 pF, 47 pF.

REF 200-06047-0010
300-06047-0010

KRC AUTHORIZED PRINT

KY 196A

LTR	ECO	DATE	BY
AB	141375	5/98	LL
AA	131703	12-97	TAC
8	102017	12-94	E.T.
7	91343	3-91	G.D.P.
6	79282	8-90	G.D.P.
5	78125	5-90	G.D.P.
4	58434	11-87	TAC.
3	56560	7-87	G.D.P.
2	56343	5-87	E.T.
1	54751	11-86	M.W.

NEXT ASSY. | UNIT | TOL UNLESS NOTED | DASH NO. | REQ | PART NO. | DESCRIPTION | ITEM

AlliedSignal Inc.

KY196A TRANSMITTER BOARD

DR: G.D.P. DATE: 8-86

002-06047-0010

SHT 1 OF 2

SINGAPORE DISTRIBUTION

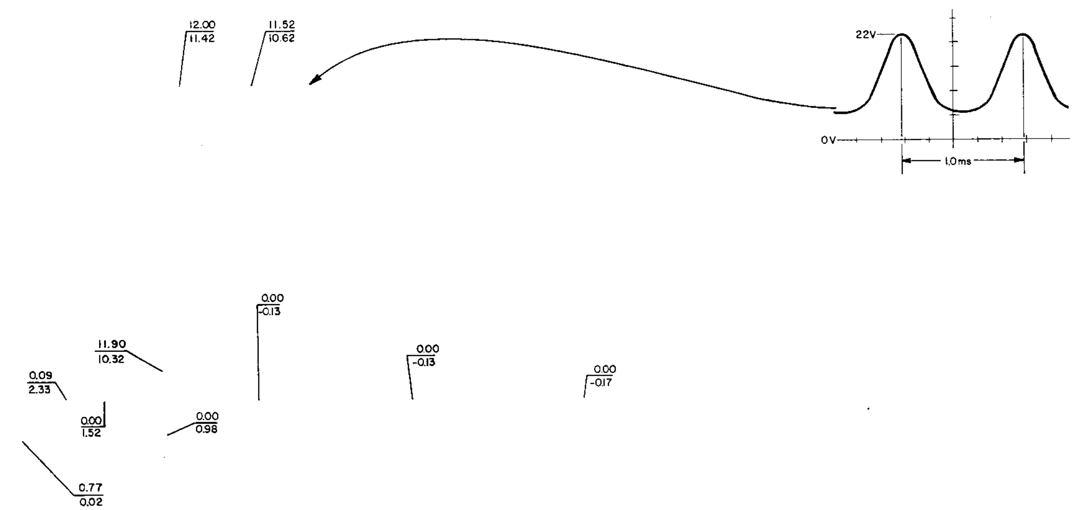

3. VOLTAGES ABOVE LINE, REC MODE
VOLTAGES BELOW LINE, XMIT MODE
VOLTAGES TAKEN WITH FLUKE 2000A.

AlliedSignal, Inc.
KY196A TRANSMITTER BOARD OVERLAY

AB AA 8 7 6 5 4 3 2 1

G.D.P. 8-86

002-06047-0010

2
2

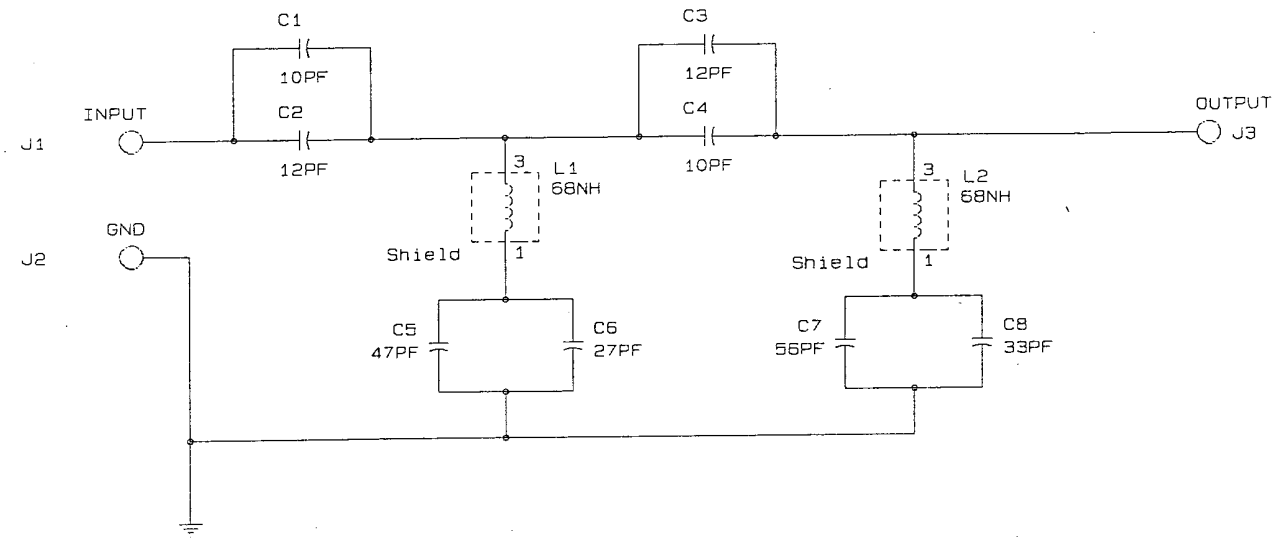

THIS DRAWING WAS CREATED WITH AND WILL BE MAINTAIN MANUALLY

REV	C.O.NO.	DATE	BY
B	144126	7-98	TAC
A	141582	5-98	TAC

NEXT ASSY: 200 - 07469 - 0099 | UNIT: KY197A & 196A
200-07469-0020/0024 | KY 196A
200 - 07799 - 0099 | KY97A & 96A

AlliedSignal Avionics, Inc.
Olathe, Kansas 66062-1212

NAME FILTER BOARD | SIZE D

EE J. BARTMESS | ARCH FILE:
ARCH DIR:
ME K. DUNAGAN | DATE | NUMBER | SHT 1
DRN WEBER/CURTIS | 8/8/94 | 002-08939-0000 | OF 1

SINGAPORE DISTRIBUTION

AUTHORIZED PRINT

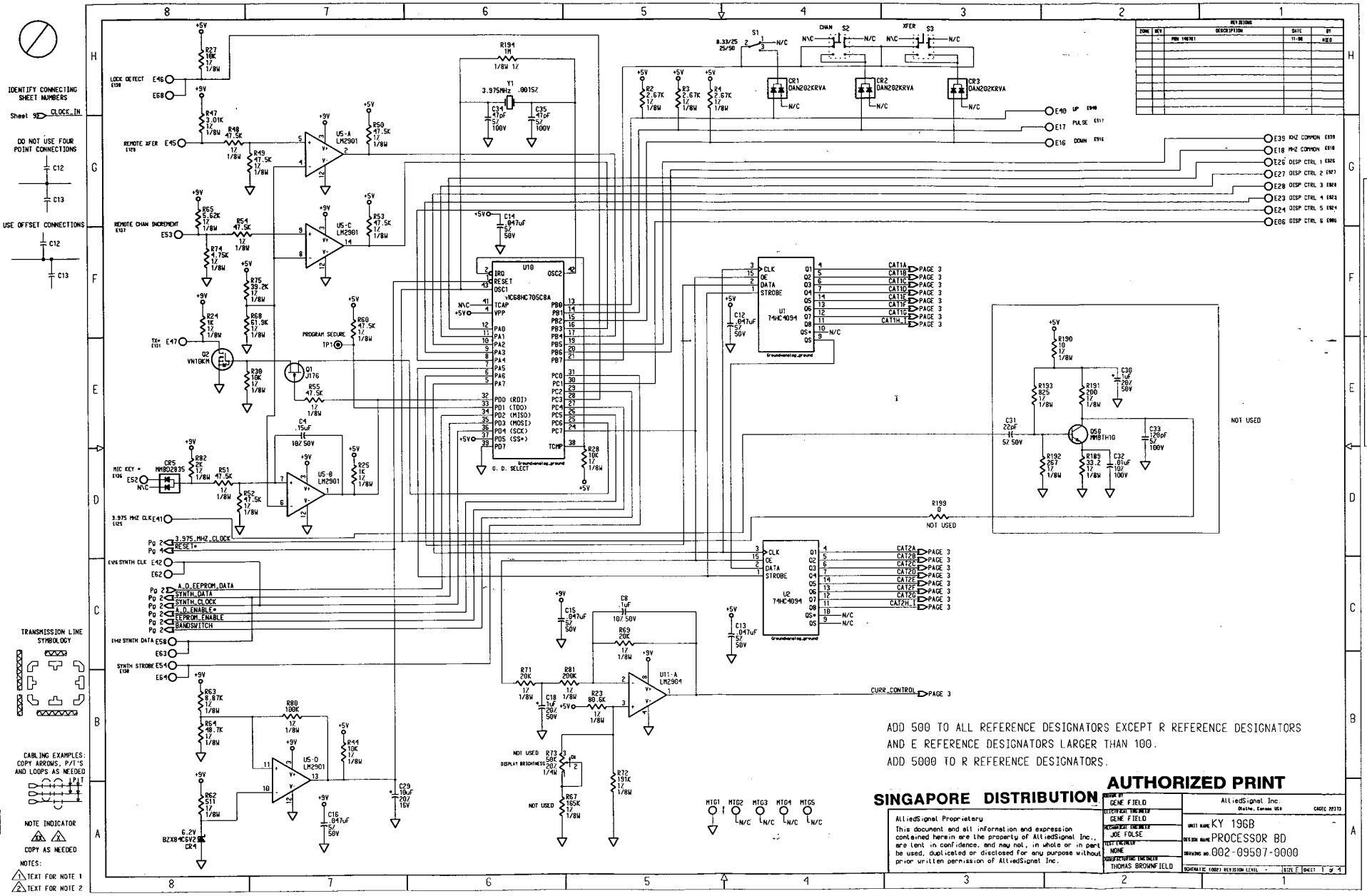
IDENTIFY CONNECTING SHEET NUMBERS
DO NOT USE FOUR POINT CONNECTIONS
USE OFFSET CONNECTIONS
TRANSMISSION LINE SYMBOLOGY
CABLING EXAMPLES: COPY ARROWS, P/T'S AND LOOPS AS NEEDED
NOTE INDICATOR
COPY AS NEEDED
NOTES:
TEXT FOR NOTE 1
TEXT FOR NOTE 2
U10 MC68HC705C8A
U5-A LM2901
U5-C LM2901
U5-B LM2901
U5-D LM2901
U11-A LM2904
U1 74HC4094
U2 74HC4094
CR1 DAN202KRVA
CR2 DAN202KRVA
CR3 DAN202KRVA
Y1 3.975MHz .001%
G. D. SELECT
PROGRAM SECURE
LOCK DETECT
REMOTE XFER
REMOTE CHAN INCREMENT
MIC KEY +
3.975 MHZ CLK
SYNTH CLK
SYNTH DATA
SYNTH STROBE
3.975_MHZ_CLOCK
RESET*
A_D_EEPROM_DATA
SYNTH_DATA
SYNTH_CLOCK
A_D_ENABLE*
EEPROM_ENABLE
BANDSWITCH
CURR_CONTROL
NOT USED
DISPLAY BRIGHTNESS
UP
PULSE
DOWN
KHZ COMMON
MHZ COMMON
DISP CTRL 1
DISP CTRL 2
DISP CTRL 3
DISP CTRL 4
DISP CTRL 5
DISP CTRL 6
ADD 500 TO ALL REFERENCE DESIGNATORS EXCEPT R REFERENCE DESIGNATORS
AND E REFERENCE DESIGNATORS LARGER THAN 100.
ADD 5000 TO R REFERENCE DESIGNATORS.
SINGAPORE DISTRIBUTION
AUTHORIZED PRINT
AlliedSignal Proprietary
This document and all information and expression contained herein are the property of AlliedSignal Inc., are lent in confidence, and may not, in whole or in part be used, duplicated or disclosed for any purpose without prior written permission of AlliedSignal Inc.
AlliedSignal Inc.
Shallow, Kansas USA
CAGEC 20370
UNIT NAME KY 19GB
DESIGN NAME PROCESSOR BD
DRAWING NO. 002-09507-0000
SCHEMATIC (002) REVISION LEVEL -
SIZE E SHEET 1 OF 4
DRAWN BY GENE FIELD
ELECTRICAL DESIGNER GENE FIELD
MECHANICAL ENGINEER JOE FOLSE
TEST ENGINEER NONE
MANUFACTURING ENGINEER THOMAS BROWNFIELD
RELEASE DATE: Nov 4, 1998
RELEASED BY: Cindy Nied
Last Edit APR 1, 1998, 8:50:44 am
Edited By Slan Edmondson
Monitor Version 160
Design Pathname $CNI/0S507000R00AU.ngc schematic sheet1
THIS PAGE PRINTED NOV 9, 1998, 1:29:21 pm
Border Rev 02

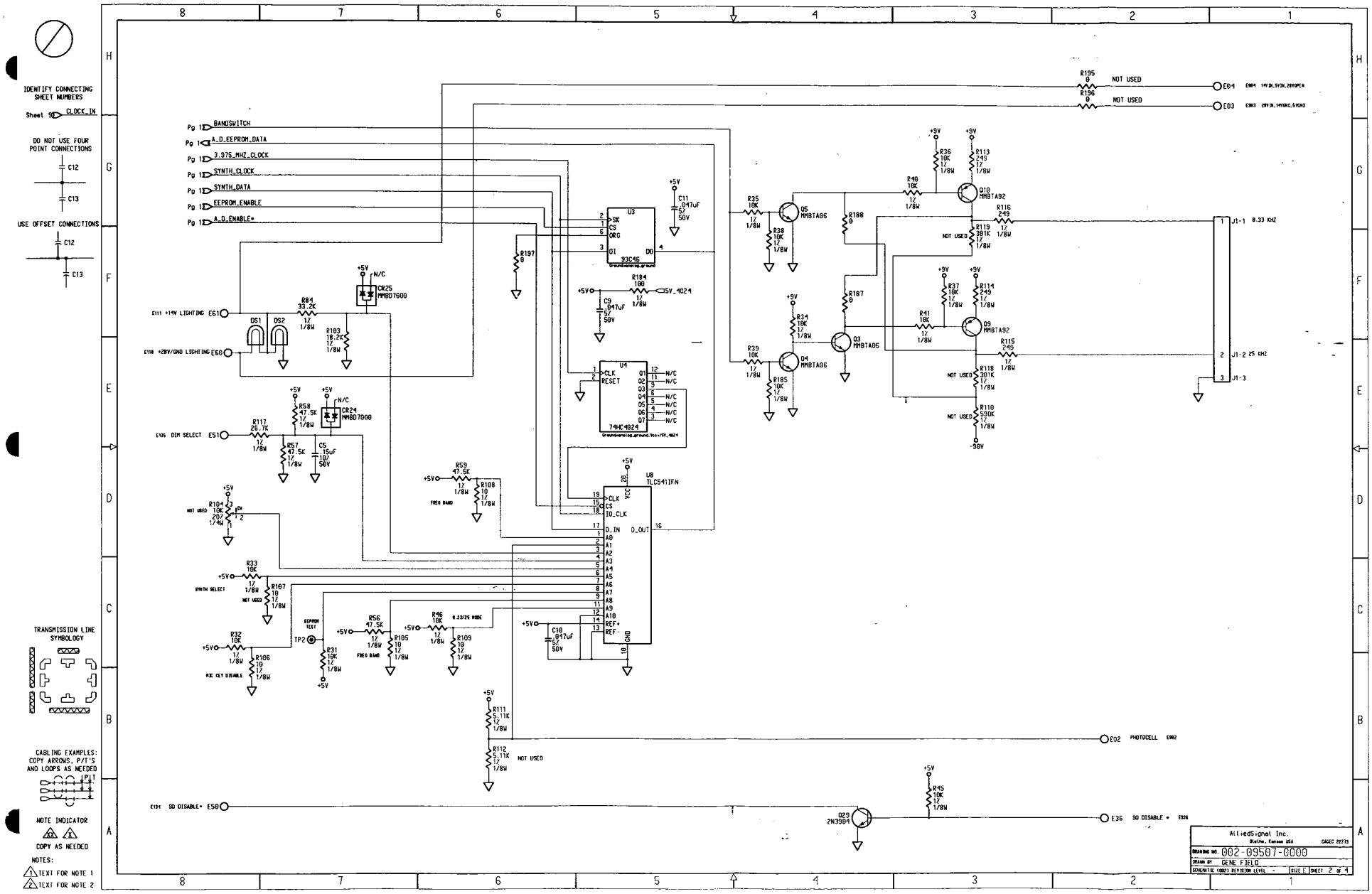
IDENTIFY CONNECTING SHEET NUMBERS
DO NOT USE FOUR POINT CONNECTIONS
USE OFFSET CONNECTIONS
TRANSMISSION LINE SYMBOLOGY
CABLING EXAMPLES: COPY ARROWS, P/T'S AND LOOPS AS NEEDED
NOTE INDICATOR
COPY AS NEEDED
NOTES:
TEXT FOR NOTE 1
TEXT FOR NOTE 2
BANDSWITCH
A_D_EEPROM_DATA
3.975_MHZ_CLOCK
SYNTH_CLOCK
SYNTH_DATA
EEPROM_ENABLE
A_D_ENABLE*
CLOCK_IN
E111 +14V LIGHTING
E110 +28V/GND LIGHTING
E105 DIM SELECT
E134 SD DISABLE*
E02 PHOTOCELL
E36 SD DISABLE *
J1-1 8.33 KHZ
J1-2 25 KHZ
J1-3
93C46
74HC4024
TLC541IFN
2N3904
MMBTA06
MMBTA92
MMBD7000
NOT USED
AlliedSignal Inc.
Olathe, Kansas USA
CAGEC 22273
DRAWING NO. 002-09507-0000
DRAWN BY GENE FIELD
SCHEMATIC (002) REVISION LEVEL -
SIZE E SHEET 2 of 4
THIS PAGE PRINTED NOV 9, 1998, 1:29:20 pm
Design Pathname
$PCBHOLD/09507000OR-_U.ngc schematic sheet2
Monitor Version 6
Edited By CINDY NIED
Last Edit NOV 9, 1998, 12:45:19 pm
Border Rev 02

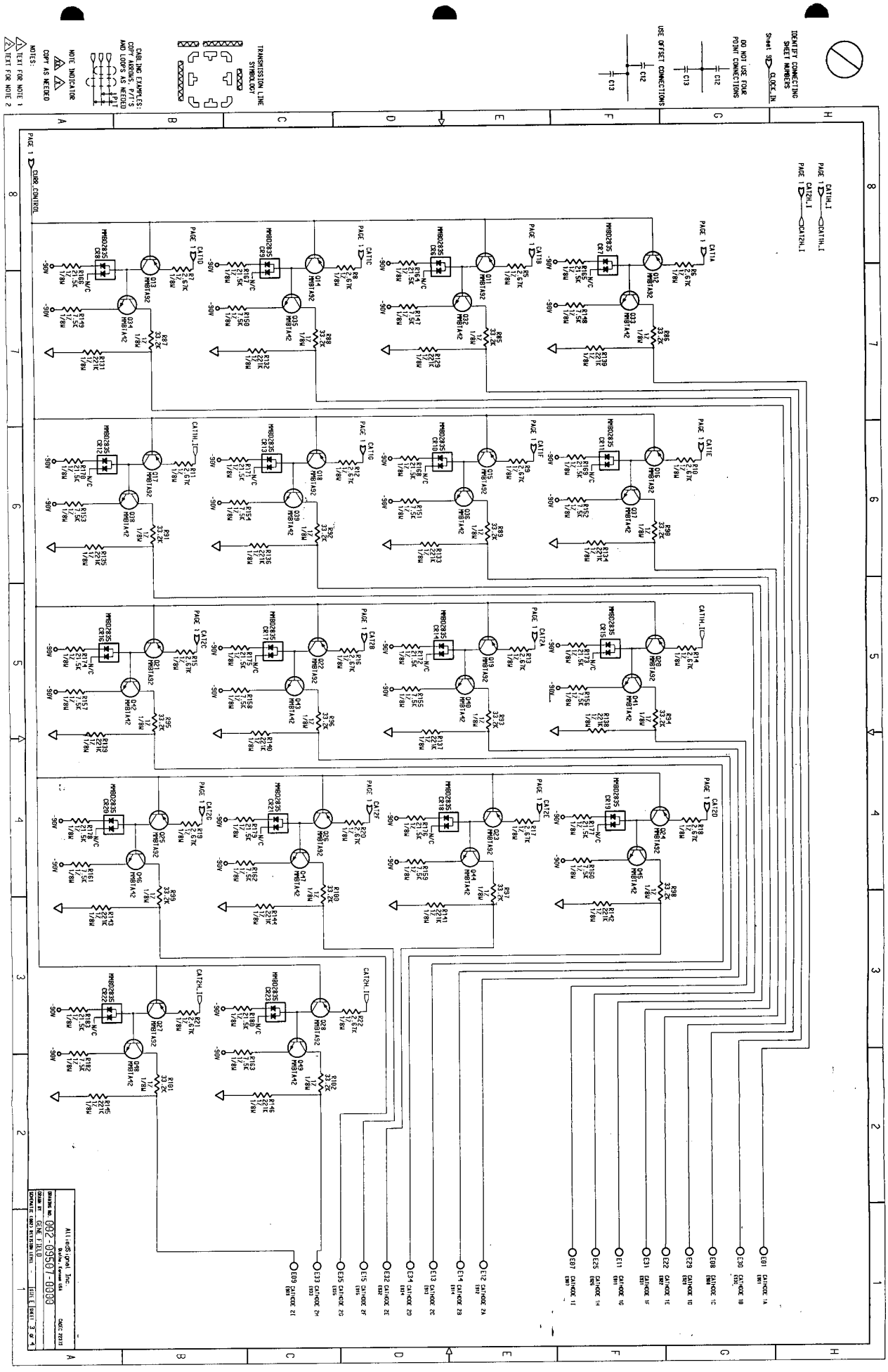

THIS PAGE PRINTED NOV 9, 1998, 1:29:19 pm

Design Pathname	Mentor Version	Edited By	Last Edit
$PCBHOLD/095070000R_-_U.mgc schematic sheet3	6	CINDY NIED	NOV 9, 1998, 12:45:14 pm

Border Rev 02

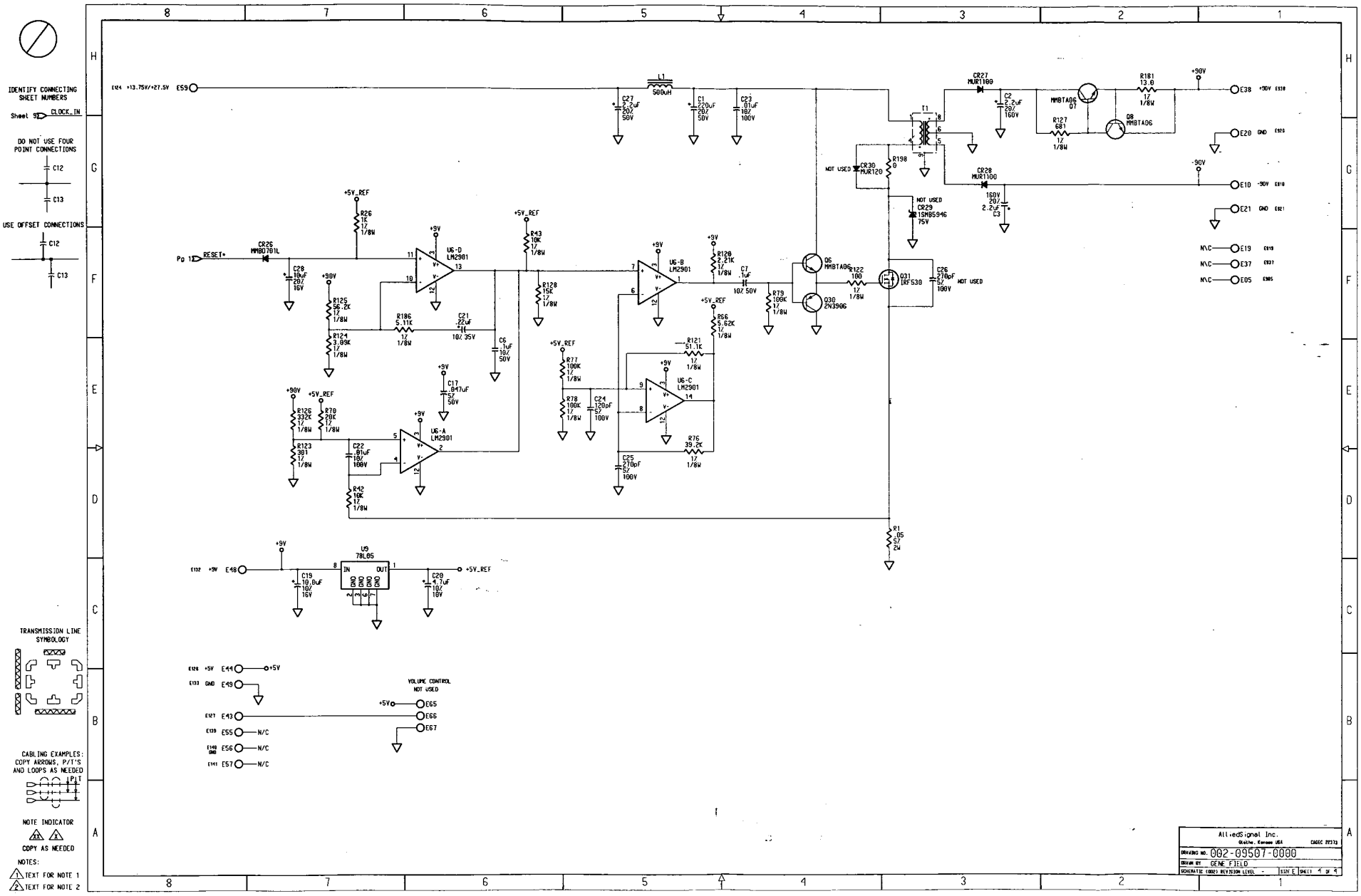

Border Rev 02

Last Edit	Edited By	Monitor Version
NOV 9, 1998, 12:45:09 pm	CINDY NIED	6

THIS PAGE PRINTED NOV 9, 1998, 1:29:17 pm

Design Pathname: $PCBHOLD/0950700000R_-_U.mgc_schematic_sheet4

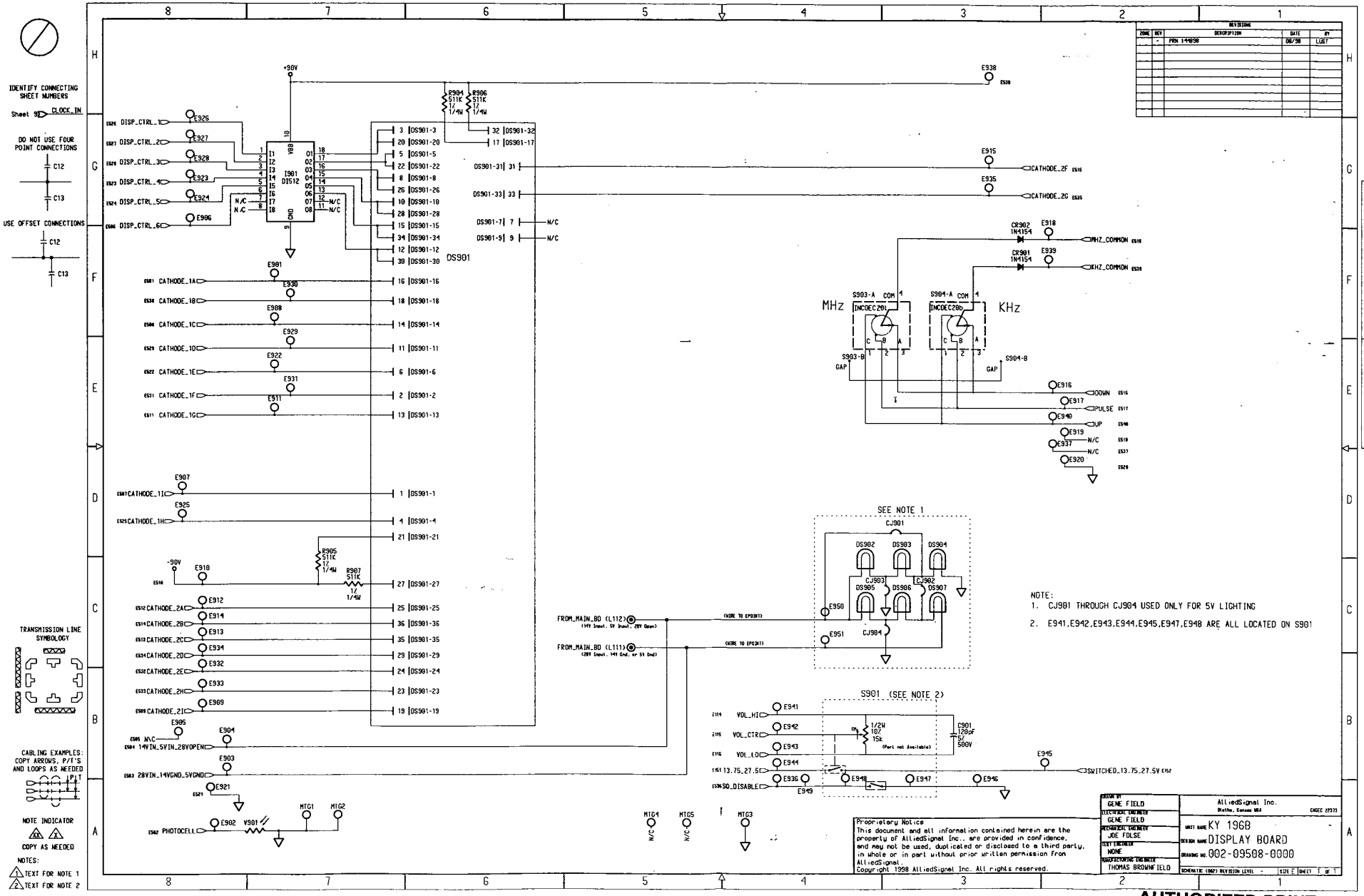

AUTHORIZED PRINT

IDENTIFY CONNECTING SHEET NUMBERS

Sheet 9 CLOCK_IN

DO NOT USE FOUR POINT CONNECTIONS

C12 C13

USE OFFSET CONNECTIONS

C12 C13

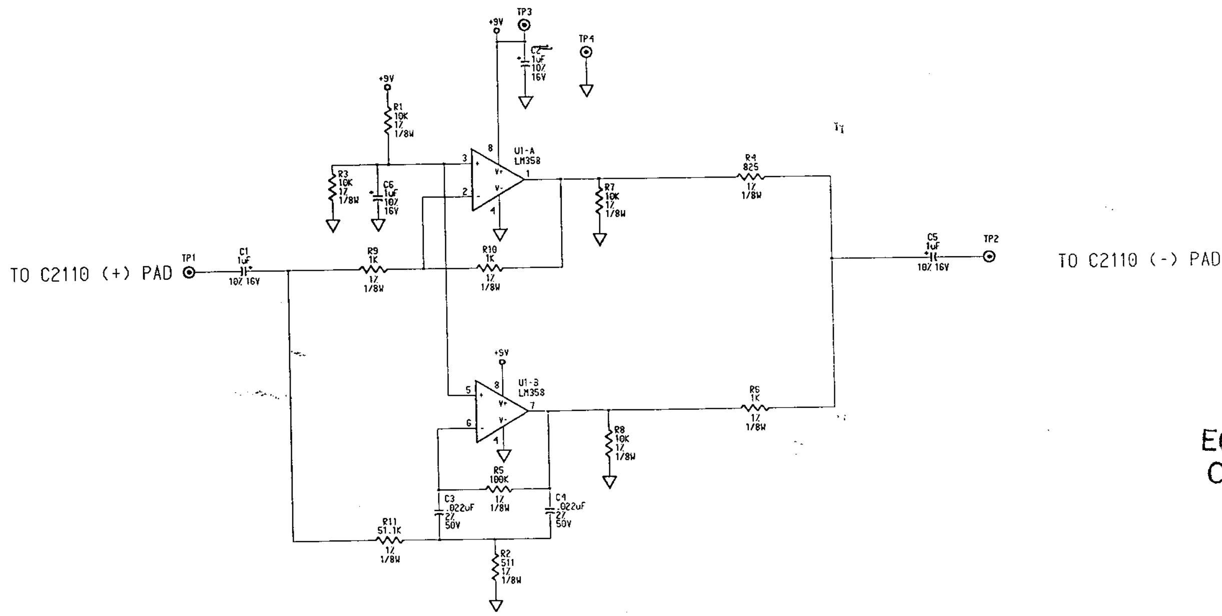

ECO IN PROCESS
OLD REV LEVEL
152188

TRANSMISSION LINE SYMBOLOGY

LAST USED:
R11
C6
U1
TP4

CABLING EXAMPLES: COPY ARROWS, P/T'S AND LOOPS AS NEEDED

NOTE INDICATOR

COPY AS NEEDED

NOTES:

1 TEXT FOR NOTE 1

2 TEXT FOR NOTE 2

SINGAPORE DISTRIBUTION

Proprietary Notice
This document and all information contained herein are the property of AlliedSignal Inc., are provided in confidence, and may not be used, duplicated or disclosed to a third party, in whole or in part without prior written permission from AlliedSignal.
Copyright 1998 AlliedSignal Inc. All rights reserved.

AUTHORIZED PRINT

DRAWN BY RON WEBER	AlliedSignal Inc. Olathe, Kansas USA CAGEC 22373
ELECTRICAL ENGINEER S. WAGNER	UNIT NAME KY 196B
MECHANICAL ENGINEER J. FOLSE	DESIGN NAME PEAK RESPONSE BD.
TEST ENGINEER C. PLUMBERG	DRAWING NO. 002-09652-01
MANUFACTURING ENGINEER D. BROWN	SCHEMATIC (COPY) REVISION LEVEL 00 SIZE E SHEET 1 OF 1

REVISIONS				
ZONE	REV	DESCRIPTION	DATE	BY
	-	PRN 151539	12-15-98	HESSELMAN

THIS PAGE PRINTED DEC 18, 1998, 3:56:48 pm

Design Pathname $PCBHOLD/096520000R_-_R.mgc schematic sheet1

Mentor Version 14

RELEASED BY: MECHELLE HESSELMAN

RELEASE DATE: 12-15-98

Edited By MICHELLE HESSELMAN

Last Edit DEC 18, 1998, 3:56:32 pm

Border Rev 02

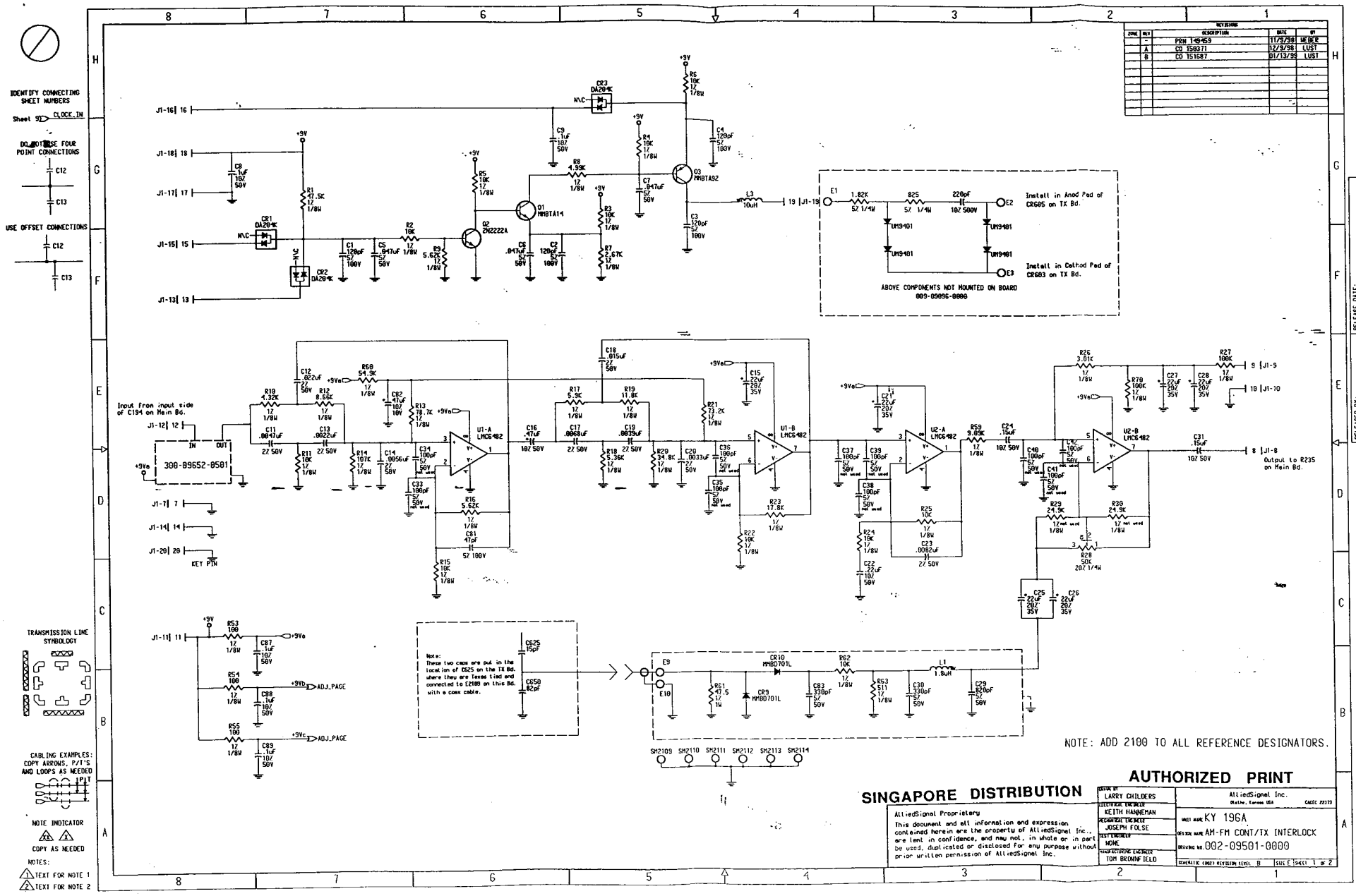
IDENTIFY CONNECTING SHEET NUMBERS
Sheet 9 CLOCK_IN
DO NOT USE FOUR POINT CONNECTIONS
USE OFFSET CONNECTIONS
TRANSMISSION LINE SYMBOLOGY
CABLING EXAMPLES: COPY ARROWS, P/T'S AND LOOPS AS NEEDED
NOTE INDICATOR
COPY AS NEEDED
NOTES:
TEXT FOR NOTE 1
TEXT FOR NOTE 2
J1-16 16
J1-18 18
J1-17 17
J1-15 15
J1-13 13
J1-12 12
J1-7 7
J1-14 14
J1-20 20
KEY PTN
J1-11 11
J1-19 19
J1-9 9
J1-10 10
J1-8 8
Input from input side of C194 on Main Bd.
300-09652-0501
Install in Anod Pad of CR605 on TX Bd.
Install in Cathod Pad of CR603 on TX Bd.
ABOVE COMPONENTS NOT MOUNTED ON BOARD 009-09096-0000
Output to R235 on Main Bd.
ADJ_PAGE
Note: These two caps are put in the location of C525 on the TX Bd. where they are Tessa tied and connected to E2109 on this Bd. with a coax cable.
SM2109 SM2110 SM2111 SM2112 SM2113 SM2114
NOTE: ADD 2100 TO ALL REFERENCE DESIGNATORS.
SINGAPORE DISTRIBUTION
AUTHORIZED PRINT
AlliedSignal Proprietary
This document and all information and expression contained herein are the property of AlliedSignal Inc., are lent in confidence, and may not, in whole or in part be used, duplicated or disclosed for any purpose without prior written permission of AlliedSignal Inc.
DRAWN BY LARRY CHILDERS
ELECTRICAL ENGINEER KEITH HANNEMAN
MECHANICAL ENGINEER JOSEPH FOLSE
TEST ENGINEER NONE
MANUFACTURING ENGINEER TOM BROWNFIELD
AlliedSignal Inc. Wichita, Kansas USA CAGEC 22273
UNIT NAME KY 196A
DESIGN NAME AM-FM CONT/TX INTERLOCK
DRAWING No. 002-09501-0000
SCHEMATIC (002) REVISION LEVEL B SIZE E SHEET 1 OF 2
REVISIONS
ZONE REV DESCRIPTION DATE BY
- PRN 149459 11/9/98 WEBER
A CO 150371 12/3/98 LUST
B CO 151687 01/13/99 LUST
RELEASED BY: R. WEBER
RELEASE DATE: NOV 9, 1998
Edited By Sharon Lust
Last Edit JAN 13, 1999, 1:59:56 pm
Monitor Version 47
THIS PAGE PRINTED JAN 13, 1999, 2:00:18 pm
Design Pathname $OPEN_ECO/095010000R-_E.mgc schematic sheet1
Border Rev 02

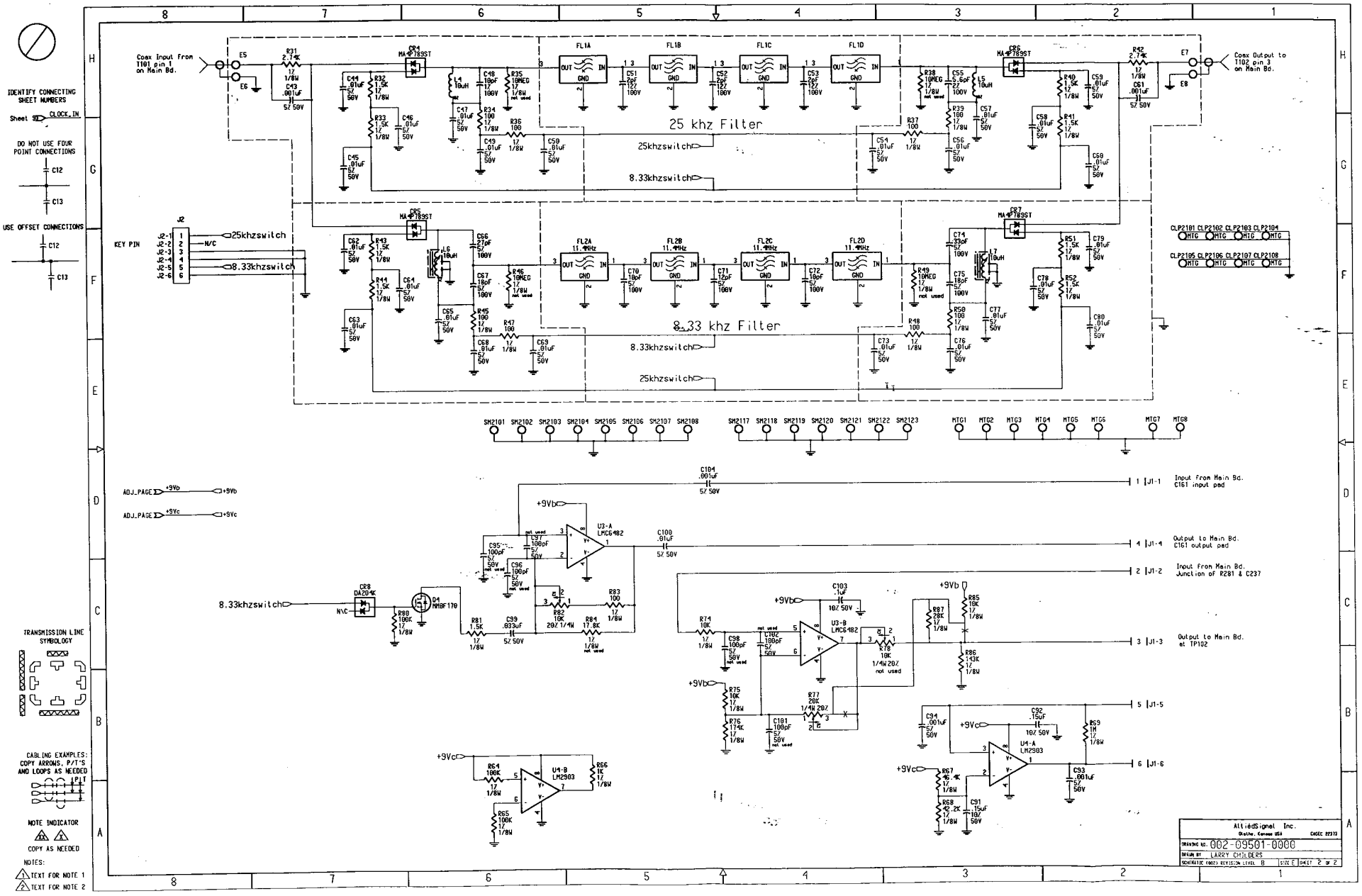
IDENTIFY CONNECTING SHEET NUMBERS
Sheet 9 CLOCK_IN
DO NOT USE FOUR POINT CONNECTIONS
USE OFFSET CONNECTIONS
TRANSMISSION LINE SYMBOLOGY
CABLING EXAMPLES: COPY ARROWS, P/T'S AND LOOPS AS NEEDED
NOTE INDICATOR
COPY AS NEEDED
NOTES:
TEXT FOR NOTE 1
TEXT FOR NOTE 2
Coax Input from T101 pin 1 on Main Bd.
Coax Output to T102 pin 3 on Main Bd.
25 khz Filter
8.33 khz Filter
25khzswitch
8.33khzswitch
KEY PIN
J2-1 N/C
J2-2 25khzswitch
J2-3 8.33khzswitch
CLP2101 CLP2102 CLP2103 CLP2104
CLP2105 CLP2106 CLP2107 CLP2108
SM2101 SM2102 SM2103 SM2104 SM2105 SM2106 SM2107 SM2108
SM2117 SM2118 SM2119 SM2120 SM2121 SM2122 SM2123
MTG1 MTG2 MTG3 MTG4 MTG5 MTG6 MTG7 MTG8
ADJ_PAGE +9Vb
ADJ_PAGE +9Vc
U3-A LMC6482
U3-B LMC6482
U4-A LM2903
U4-B LM2903
Q4 MMBF170
D8 DA204K
1 J1-1 Input from Main Bd. C161 input pad
4 J1-4 Output to Main Bd. C161 output pad
2 J1-2 Input from Main Bd. Junction of R281 & C237
3 J1-3 Output to Main Bd. at TP102
5 J1-5
6 J1-6
AlliedSignal Inc.
Olathe, Kansas USA
CAGE 02373
DRAWING NO. 002-09501-0000
DRAWN BY LARRY CHILDERS
SCHEMATIC (MOD) REVISION LEVEL B
SIZE E SHEET 2 OF 2
THIS PAGE PRINTED JAN 13, 1999, 2:09:10 pm
Design Filename $OPEN_ECO/09501000OR_-_E.mgc schematic sheet2
Monitor Version 4G
Edited By Sharon Lust
Last Edit JAN 13, 1999, 2:00:02 pm
Border Rev 02

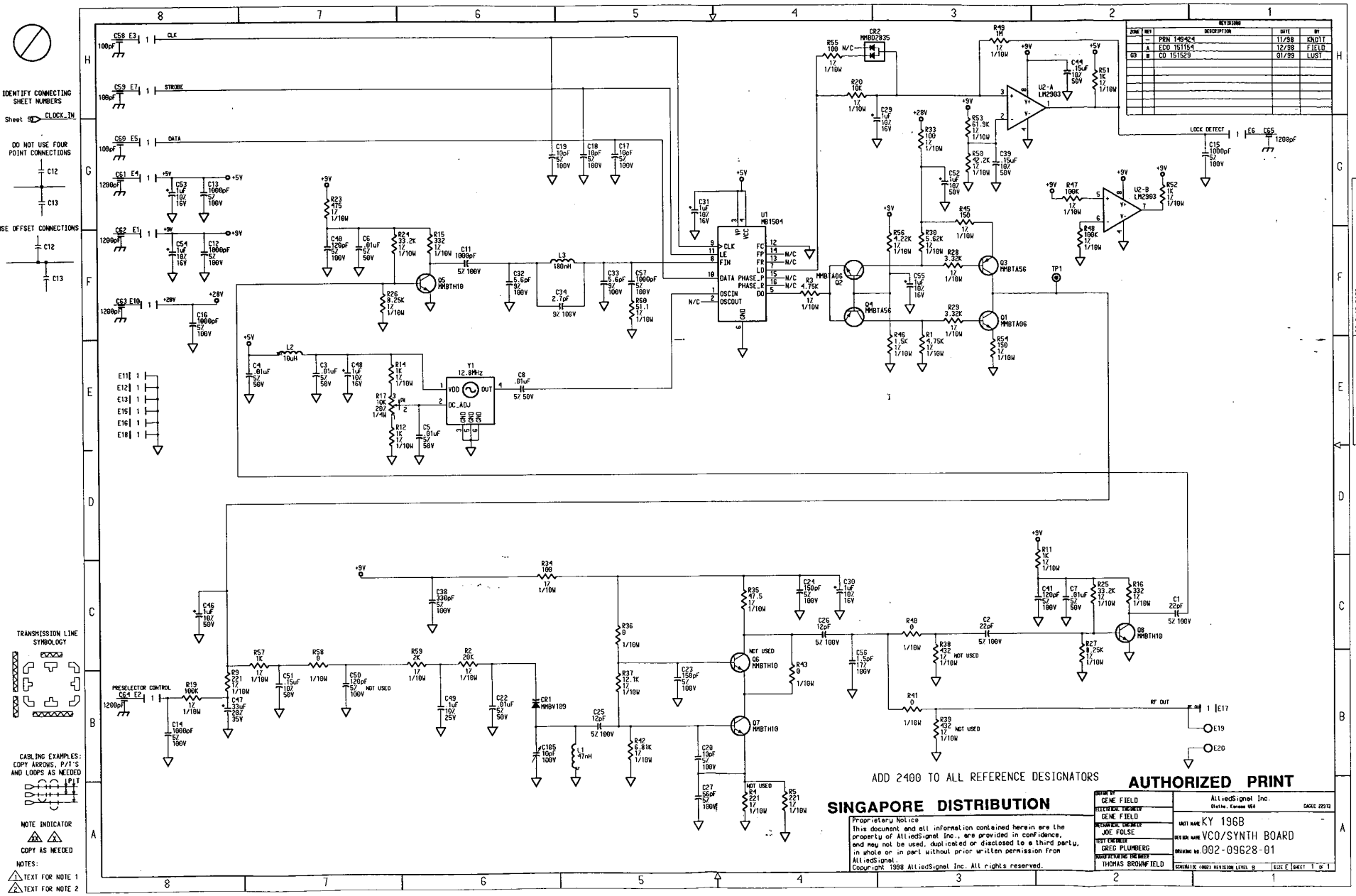
IDENTIFY CONNECTING SHEET NUMBERS
DO NOT USE FOUR POINT CONNECTIONS
USE OFFSET CONNECTIONS
TRANSMISSION LINE SYMBOLOGY
CABLING EXAMPLES: COPY ARROWS, P/T'S AND LOOPS AS NEEDED
NOTE INDICATOR
COPY AS NEEDED
NOTES:
TEXT FOR NOTE 1
TEXT FOR NOTE 2
U1 MB1504
U2-A LM2903
U2-B LM2903
Y1 12.8MHz
ADD 2400 TO ALL REFERENCE DESIGNATORS
AUTHORIZED PRINT
SINGAPORE DISTRIBUTION
Proprietary Notice
This document and all information contained herein are the property of AlliedSignal Inc., are provided in confidence, and may not be used, duplicated or disclosed to a third party, in whole or in part without prior written permission from AlliedSignal.
Copyright 1998 AlliedSignal Inc. All rights reserved.
GENE FIELD
GENE FIELD
JOE FOLSE
GREG PLUMBERG
THOMAS BROWNFIELD
AlliedSignal Inc.
Olathe, Kansas USA
CAGE 22272
UNIT NAME KY 196B
DESIGN NAME VCO/SYNTH BOARD
DRAWING NO. 002-09628-01
SCHEMATIC (002) REVISION LEVEL B
SIZE E SHEET 1 OF 1
REVISIONS
ZONE REV DESCRIPTION DATE BY
- PRN 149424 11/98 KNOTT
A ECO 151154 12/98 FIELD
G3 B CO 151529 01/99 LUST
RELEASED BY: Gene Field
RELEASE DATE: DEC 21, 1998
Last Edit JAN 6, 1999
Edited By Sheron Lust
Mentor Version 5
Design Pathname $CNT/09628001R_A_E.mgc schematic sheet1
THIS PAGE PRINTED JAN 6, 1999, 10:00:38 am
Border Rev 02

NOTES: R1501 NOT USED
ON 200-08506-0004

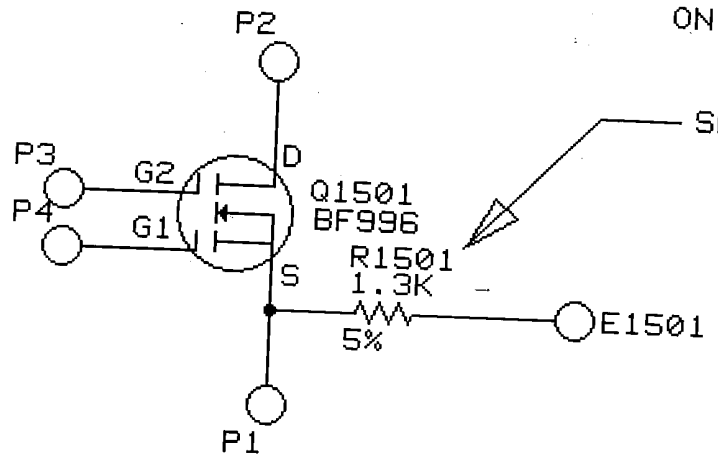

THIS DRAWING WAS CREATED WITH AND WILL BE MAINTAINED WITH SCHEMA III

REV	C.O.NO.	DATE	BY
AA	141829	7/10/98	GRT
1	91374	4/2/91	CSJ

NEXT ASSY:
UNIT:

ALLIED SIGNAL
KING RADIO CORPORATION
OLATHE, KANSAS 66062

NAME: RF AMP BD.
SIZE: A

EE: J.W.B
ARCH FILE: 850600X1
ARCH DIR:
ME: M.S.
DATE: 9-19-90
SHT 1 OF 1
DRN: J. GRIBBLE
NUMBER: 002-08506-0000

AUTHORIZED PRINT

KY196B RF BLOCK DIAGRAM

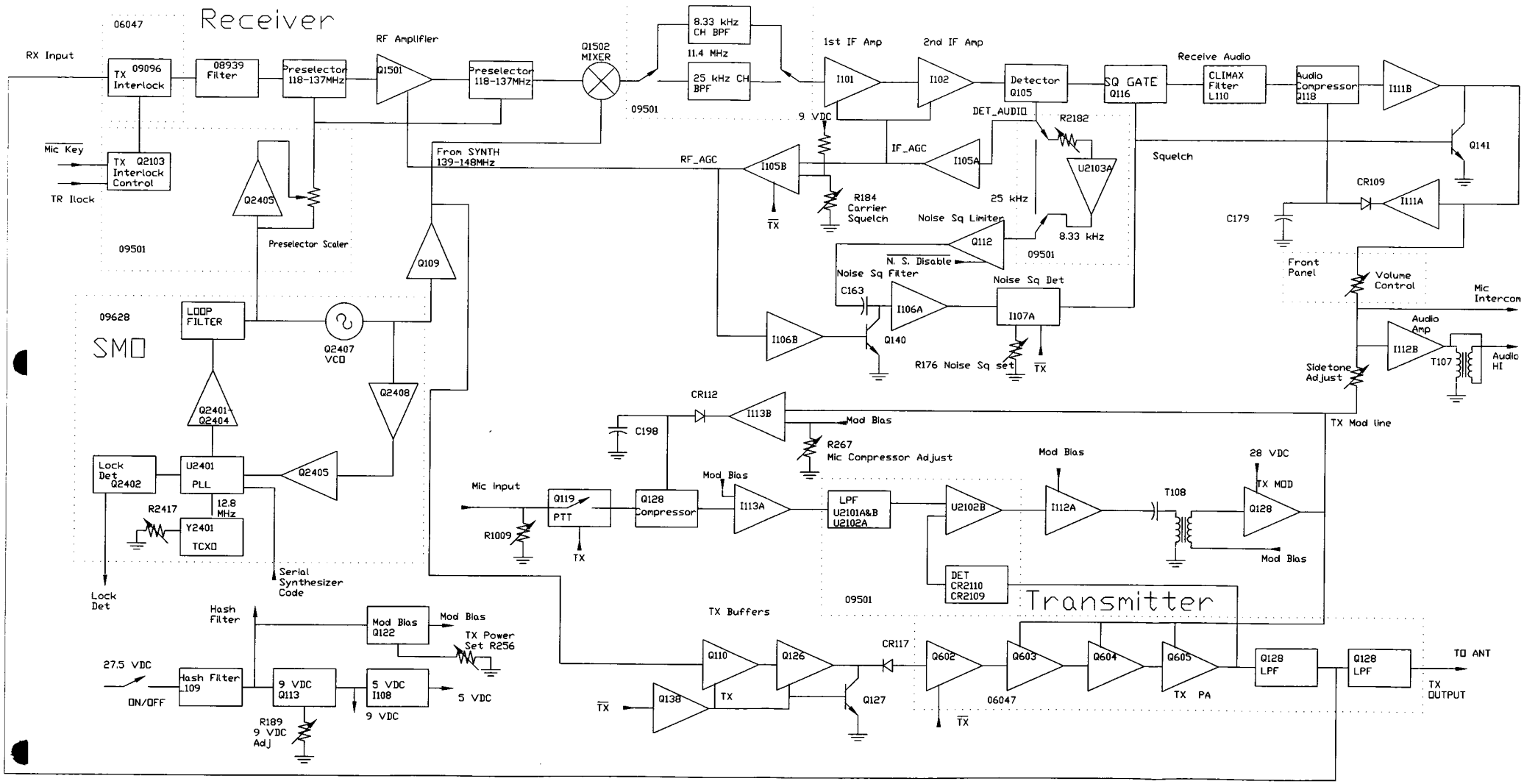

January 28, 1999
B. Altmeyer

Assembly 07469 unless otherwise noted

Figure 4-1

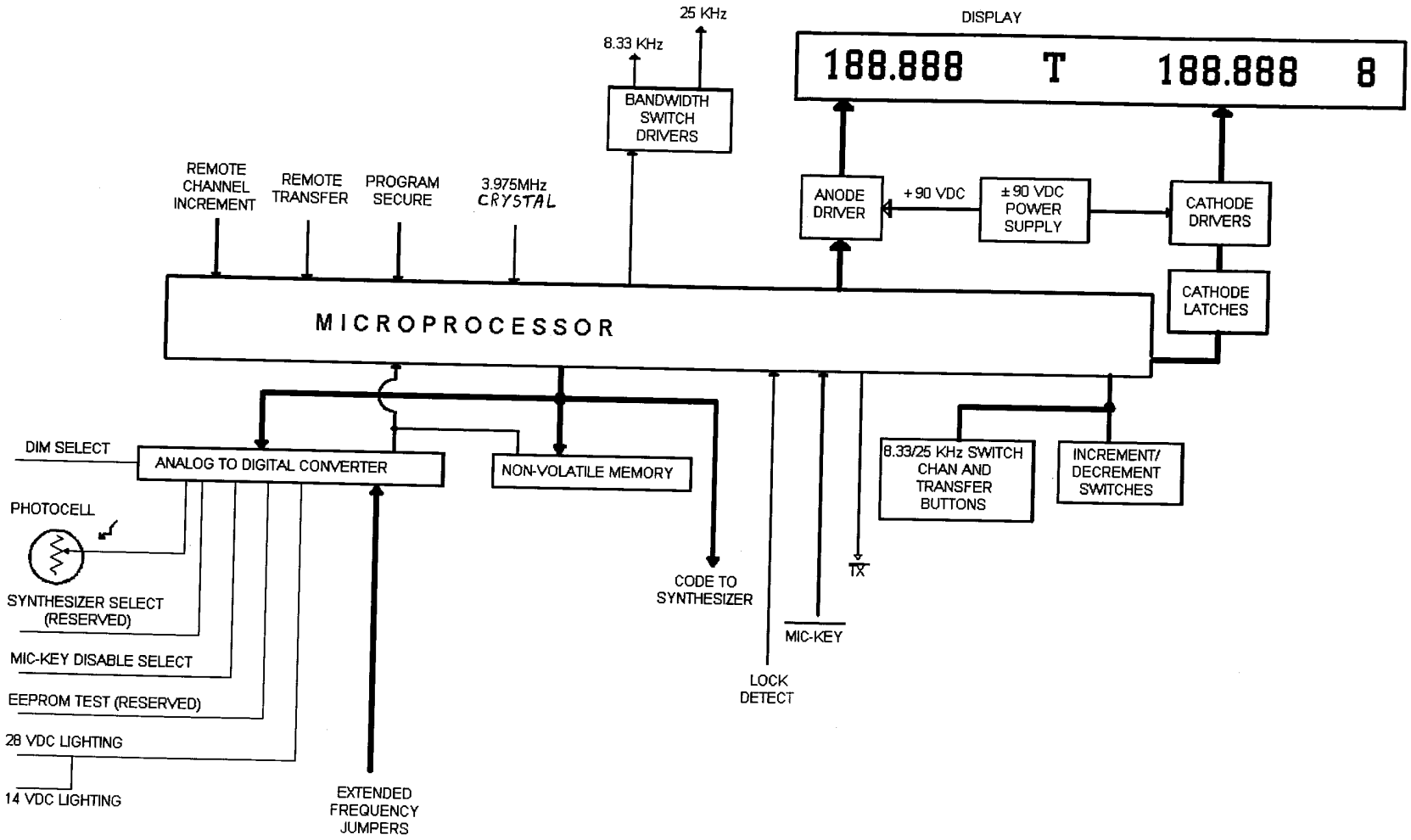

Figure 4-2
1-99