Pcgerber II V 4.5 : Mon Jul 10 13:45:09 2000 - (Untitled)

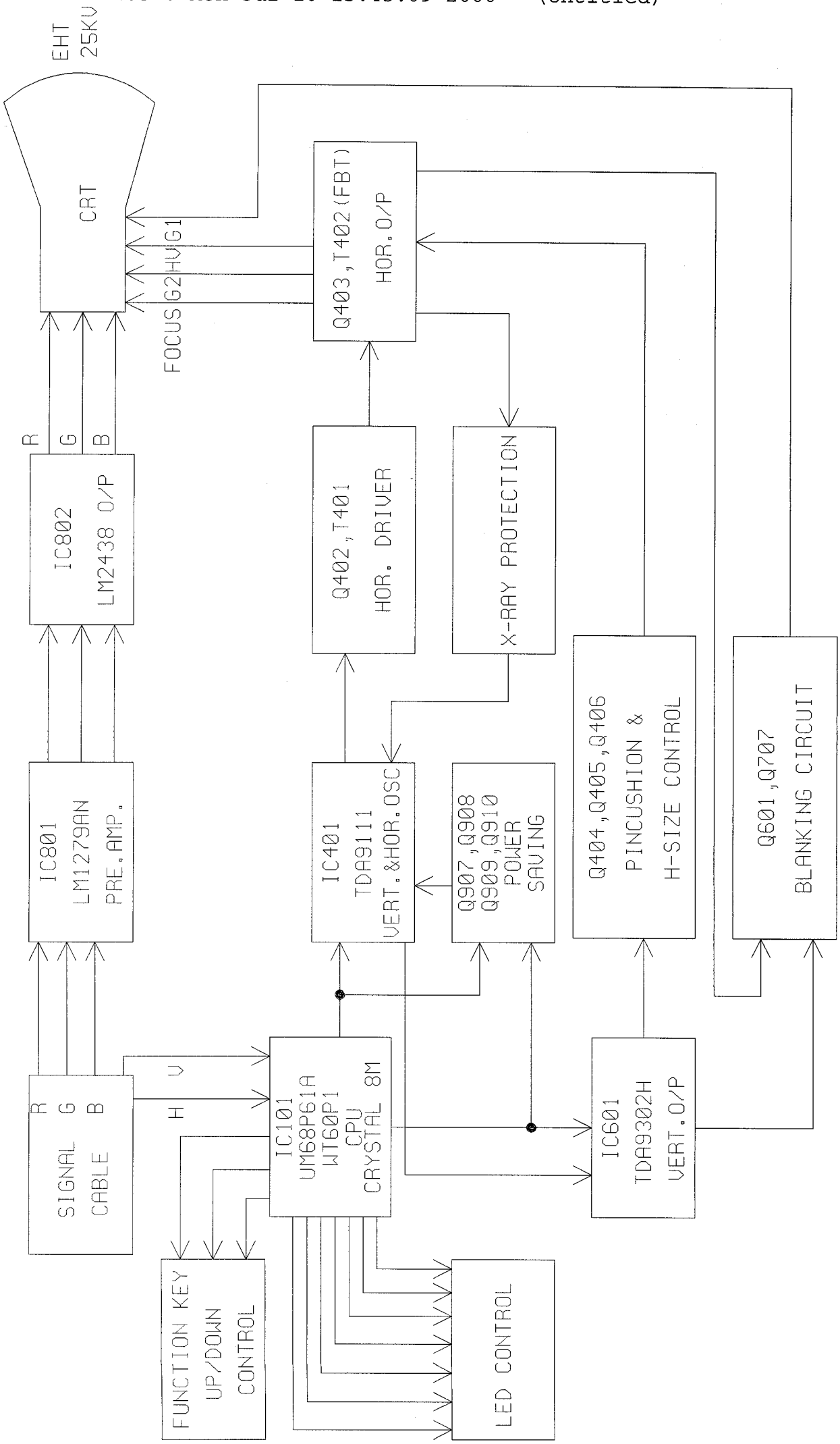

Pcgerber II V 4.5 : Mon Jul 10 13:46:30 2000 - (Untitled)

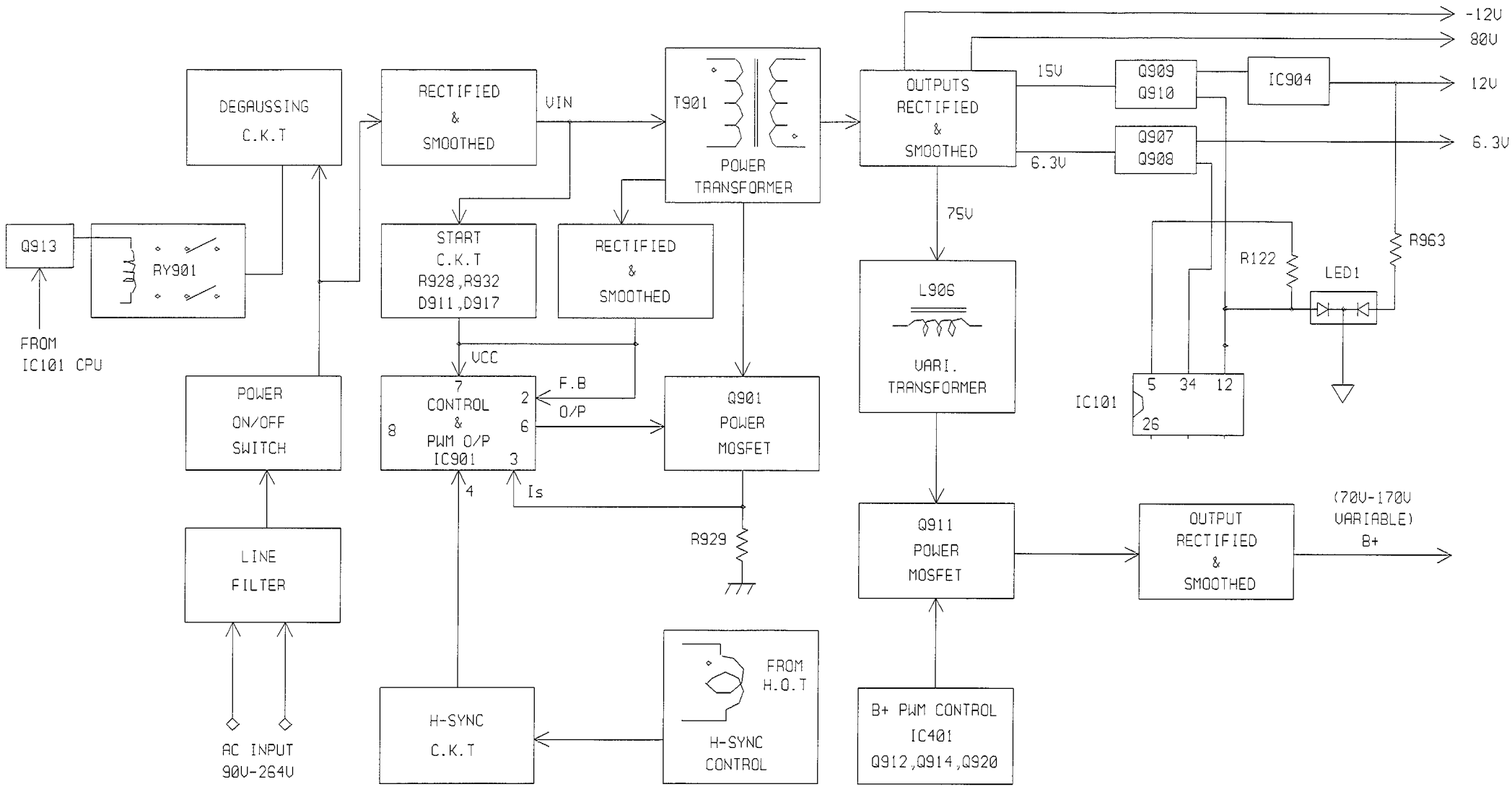
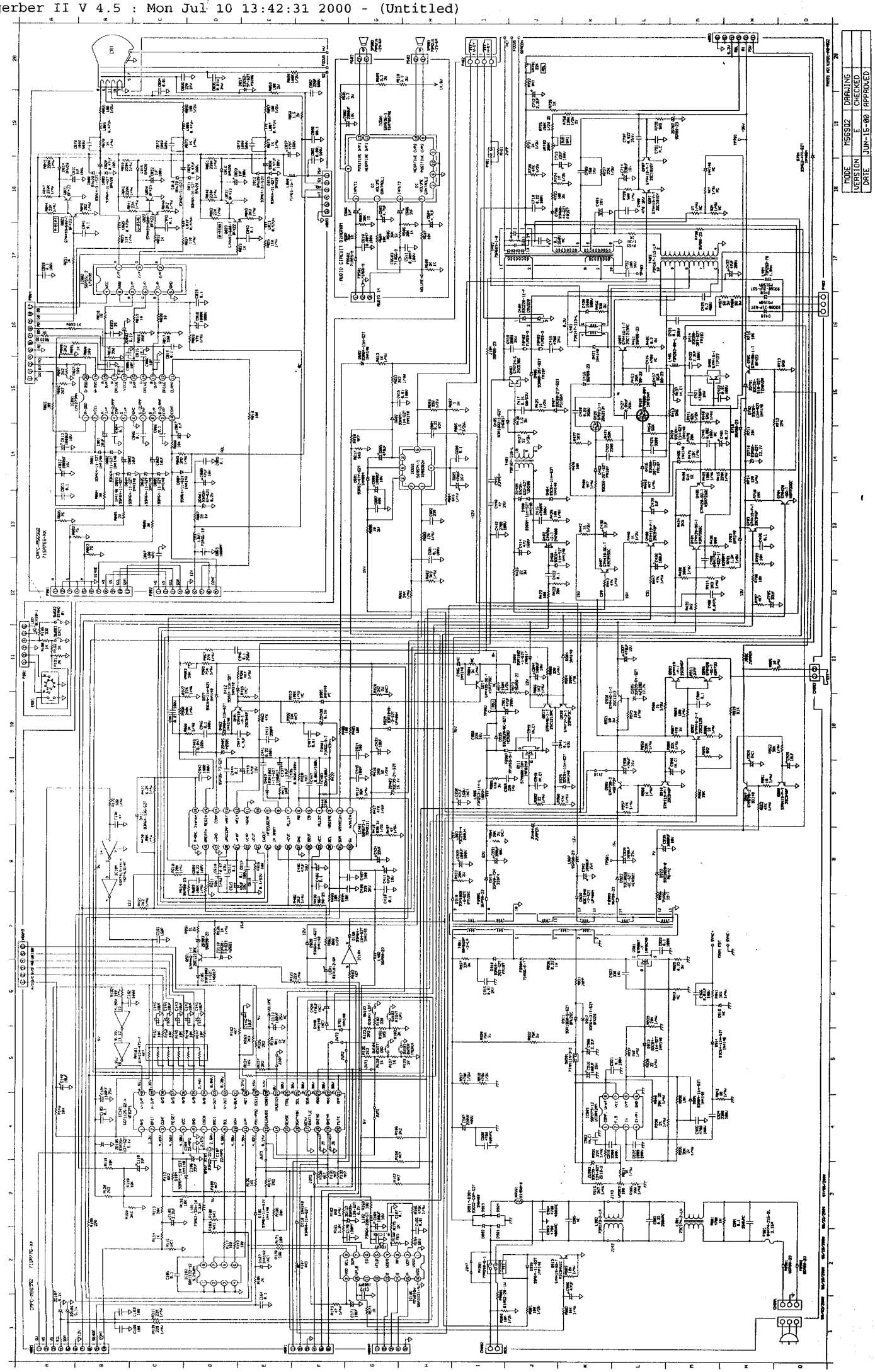
Pcgerber II V 4.5 : Mon Jul 10 13:42:31 2000 - (Untitled)