JBL GAMING Q910P / COMPLIANCE ON SPEAKER COVER & SLIDER

Artworks - Scale 1:1 - Unit: mm

SLIDER ARM COMPLIANCE

finishes: Laser etching

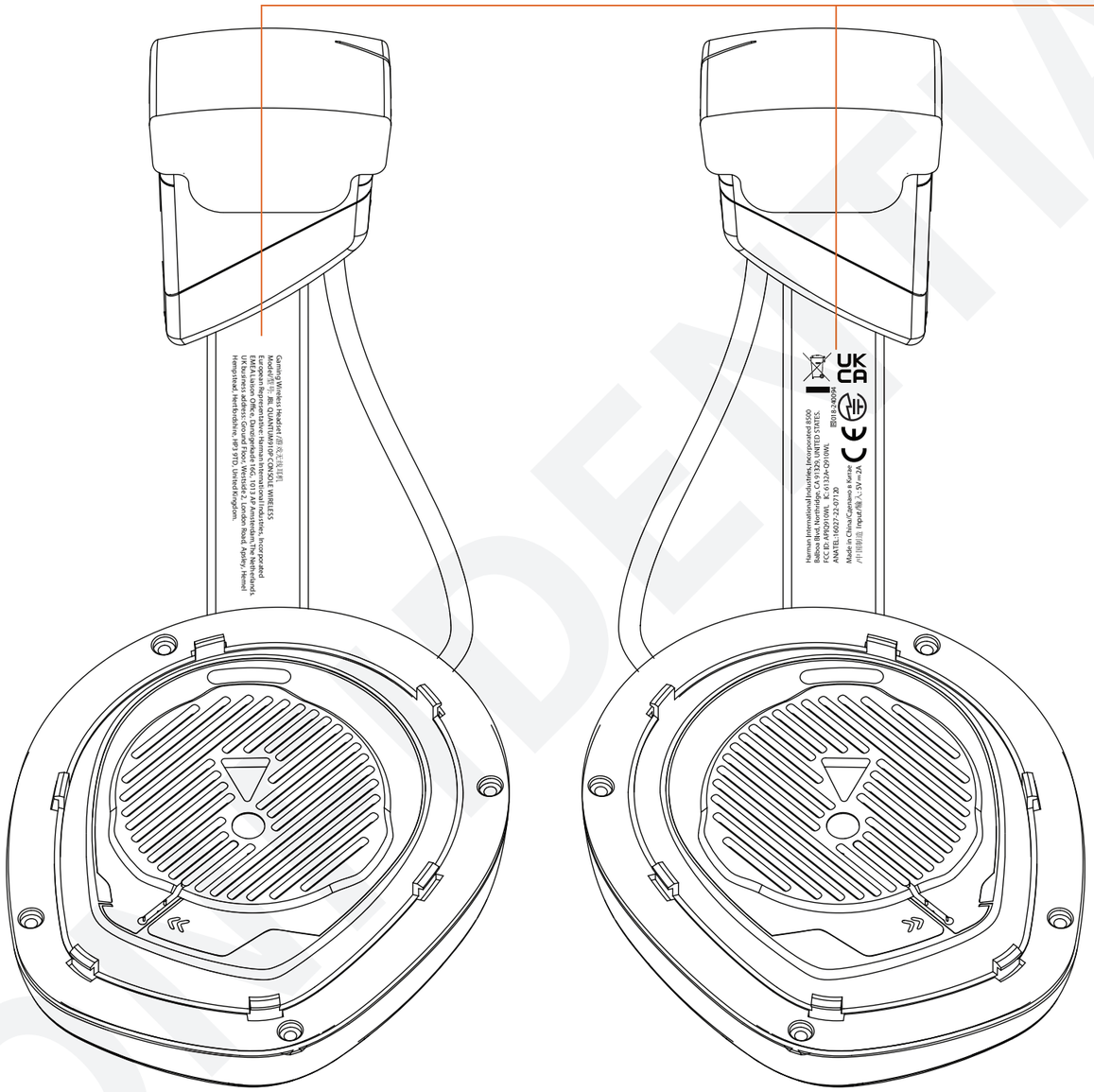

11.2 mm

LHS

8.8mm

RHS

CONFIDENTIAL

Harman International. Confidential. Copyright © 2021