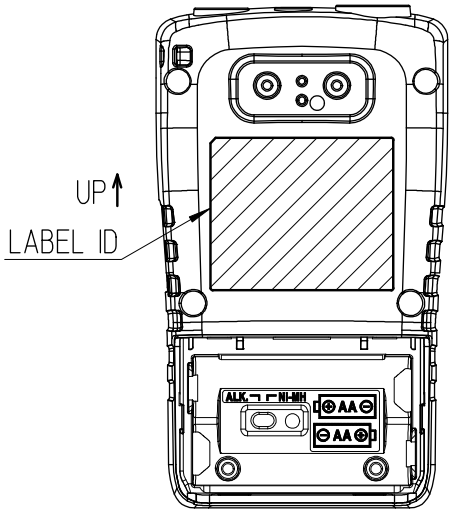
UP
LABEL ID
ALK.
NI-MH
AA
AA