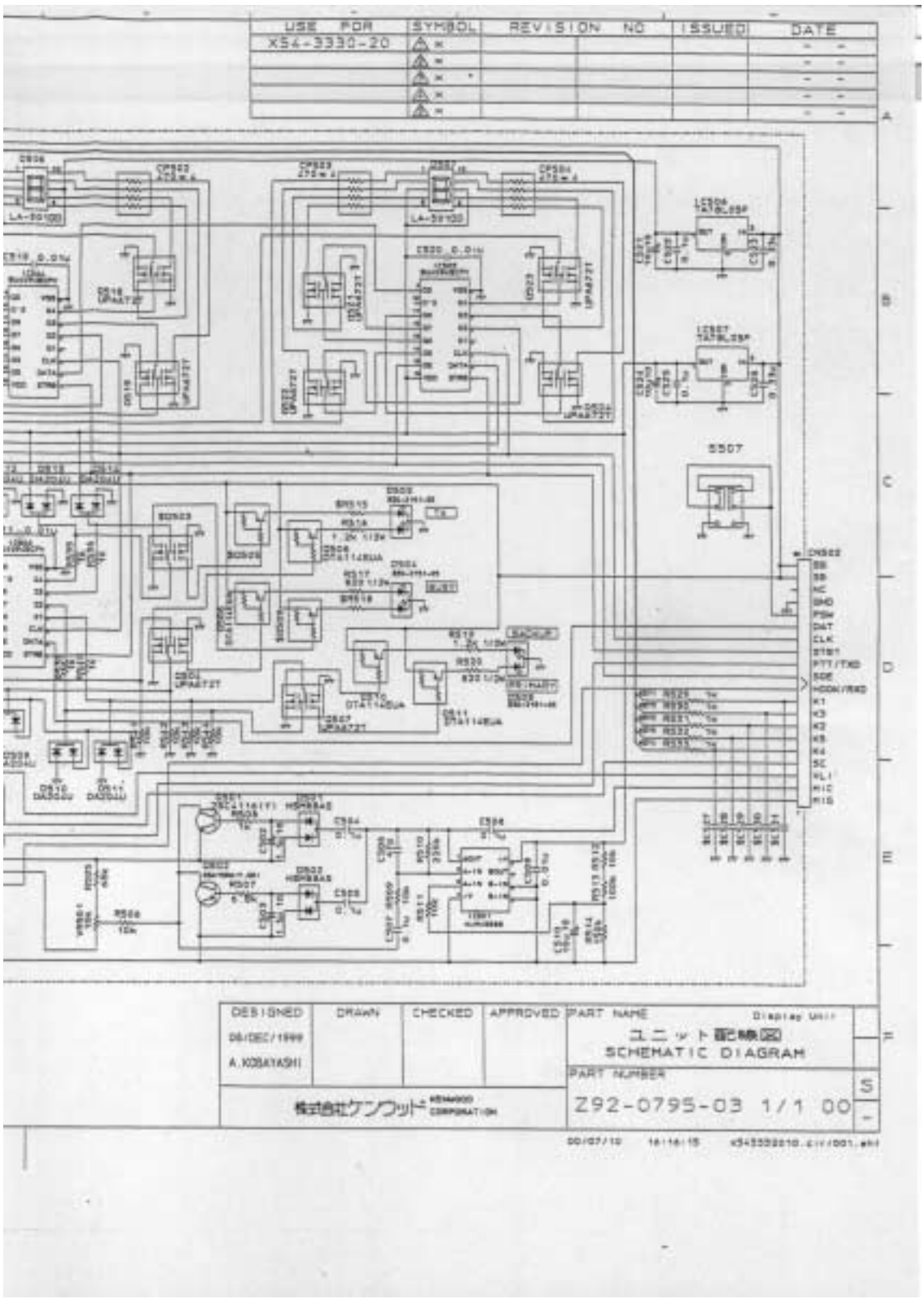

FCC ID : ALH31103110

MODEL NAME : TKR-750K

CIRCUIT SCHEMATIC:

DISPLAY Unit (Right)