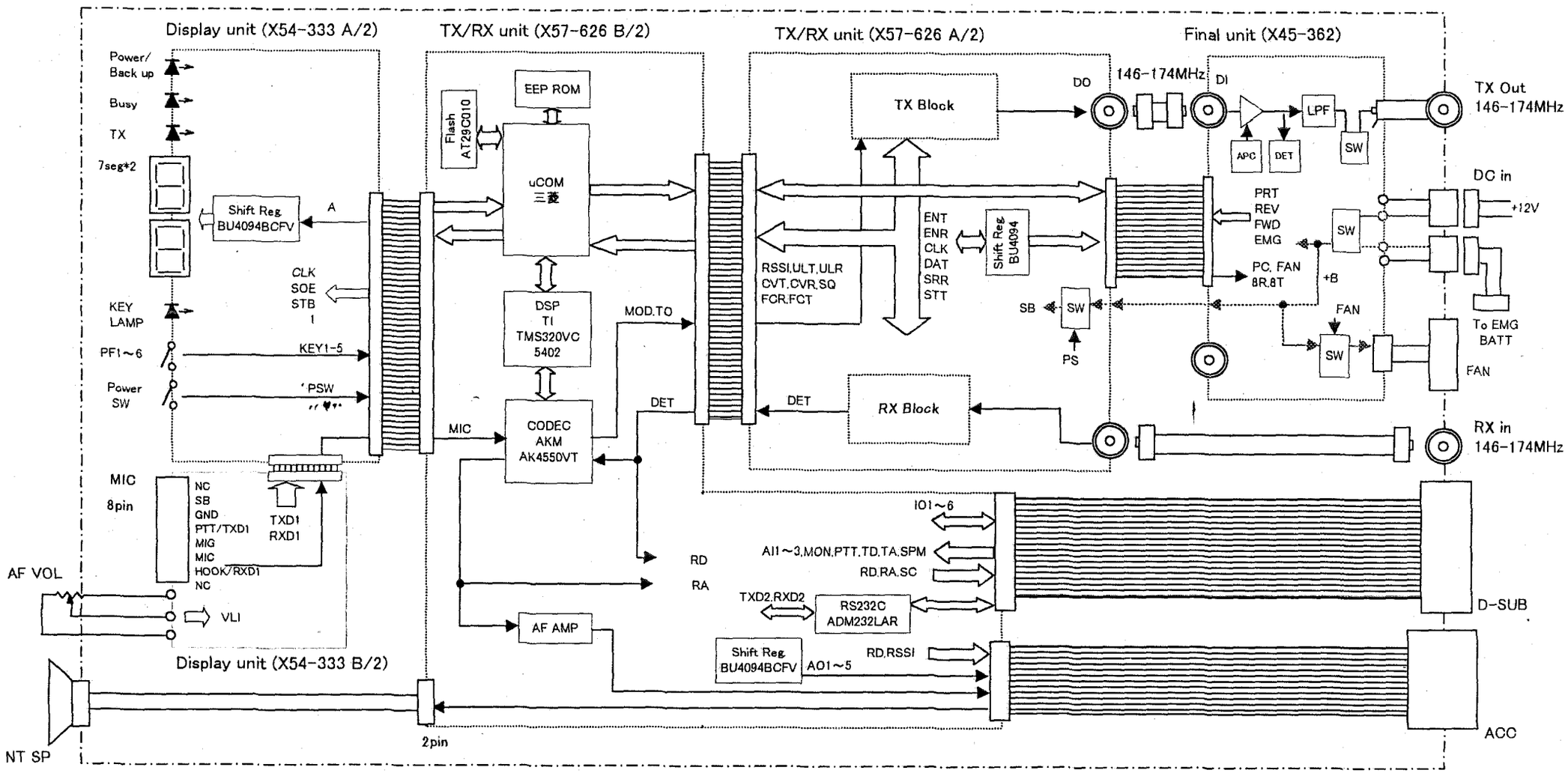Model Name: TKR-750K
EX-3110/3111 Block Diagram