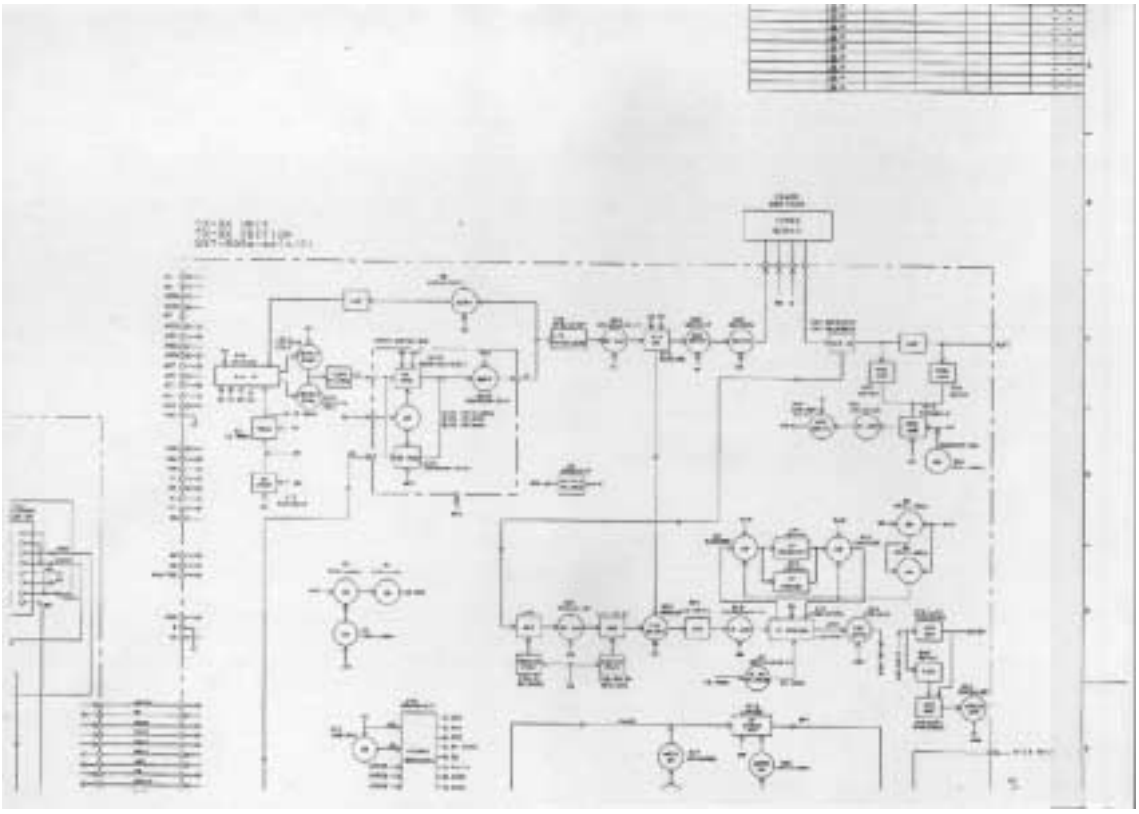

BLOCKDIAGRAM(Top Right)
MODEL NAME:TK-760HGK
FCC ID:ALH29373210)