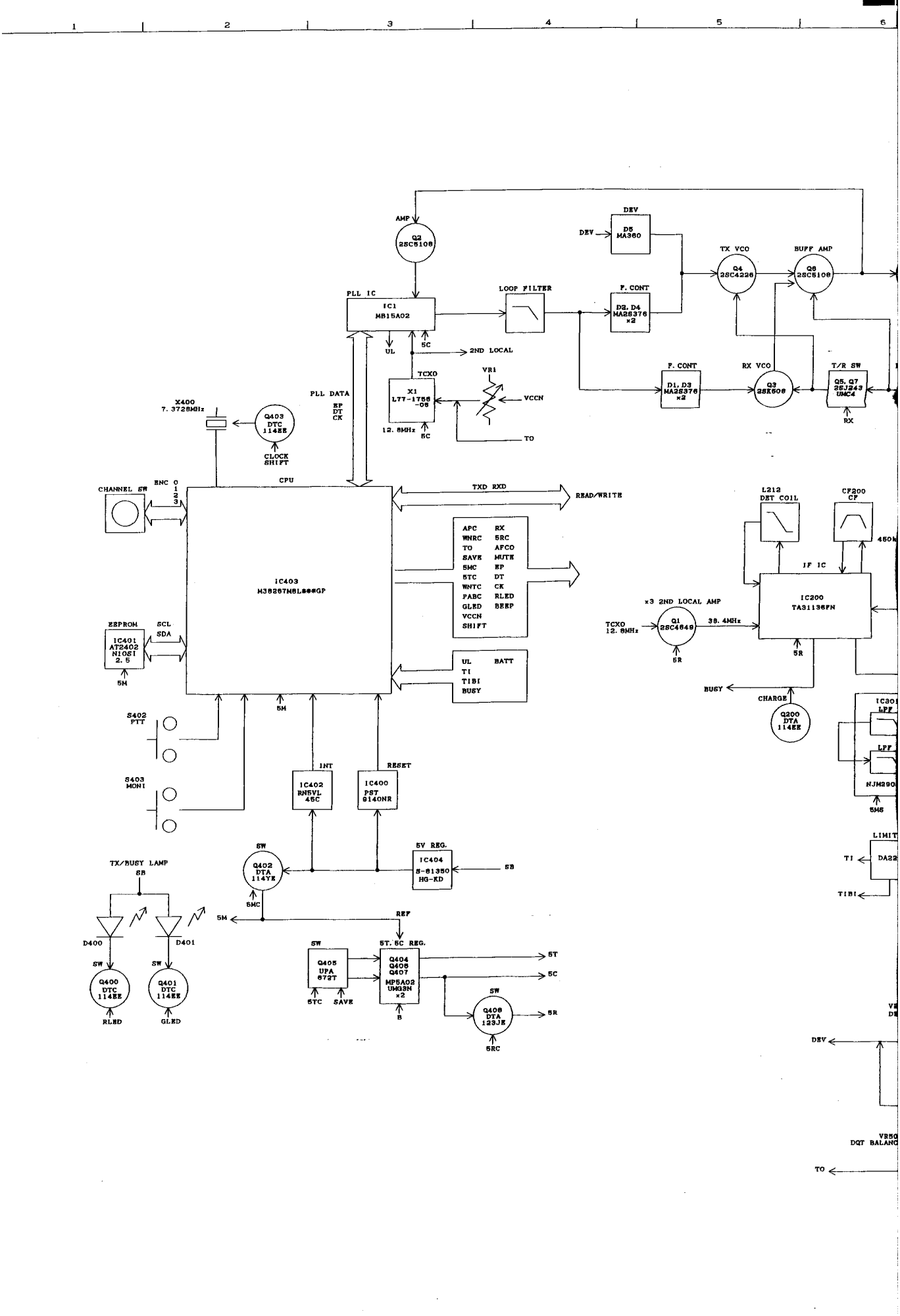
AMP
Q2 2SC5108
DEV
D5 MA360
TX VCO
Q4 2SC4226
BUFF AMP
Q6 2SC5108
PLL IC
IC1 MB15A02
LOOP FILTER
F. CONT
D2, D4 MA28376 x2
UL
5C
2ND LOCAL
TCXO
X1 L77-1756 -05
VR1
VCCN
TO
12. 8MHz
F. CONT
D1, D3 MA28376 x2
RX VCO
Q3 2SK508
T/R SW
Q5, Q7 2SJ243 UMC4
RX
PLL DATA
EP
DT
CK
X400 7. 3728MHz
Q403 DTC 114EE
CLOCK SHIFT
CHANNEL SW
ENC 0 1 2 3
CPU
TXD RXD
READ/WRITE
IC403 M38267M8L###GP
APC RX
WNRC 5RC
TO AFCO
SAVE MUTE
5MC EP
5TC DT
WNTC CK
FABC RLED
GLED BEEP
VCCN
SHIFT
UL BATT
TI
TIBI
BUSY
EEPROM
IC401 AT2402 N10SI 2. 5
SCL
SDA
5M
S402 PTT
S403 MONI
INT
RESET
IC402 RN5VL 45C
IC400 PST 9140NR
SW
Q402 DTA 114YE
5V REG.
IC404 S-81350 HG-KD
SB
5MC
REF
TX/BUSY LAMP
D400
D401
Q400 DTC 114EE
Q401 DTC 114EE
RLED
GLED
SW
Q405 UPA 672T
ST. 5C REG.
Q404 Q406 Q407 MP5A02 UMG3N x2
5TC
SAVE
B
5T
5C
Q408 DTA 123JE
5R
5RC
L212 DET COIL
CF200 CF
IF IC
IC200 TA31136FN
x3 2ND LOCAL AMP
Q1 2SC4649
TCXO 12. 8MHz
38. 4MHz
5R
BUSY
CHARGE
Q200 DTA 114EE
LPF
NJM290
5MS
LIMIT
DA22
TI
TIBI
DEV
VR50
DQT BALANC
TO

USE FOR	SYMBOL	REVISION NO	CODE	ISSUED	DATE
	1 ×				19 - -
	2 ×				19 - -
	3 ×				19 - -
	4 ×				19 - -
	5 ×				19 - -
	6 ×				19 - -
	7 ×				19 - -
	8 ×				19 - -
	9 ×				19 - -

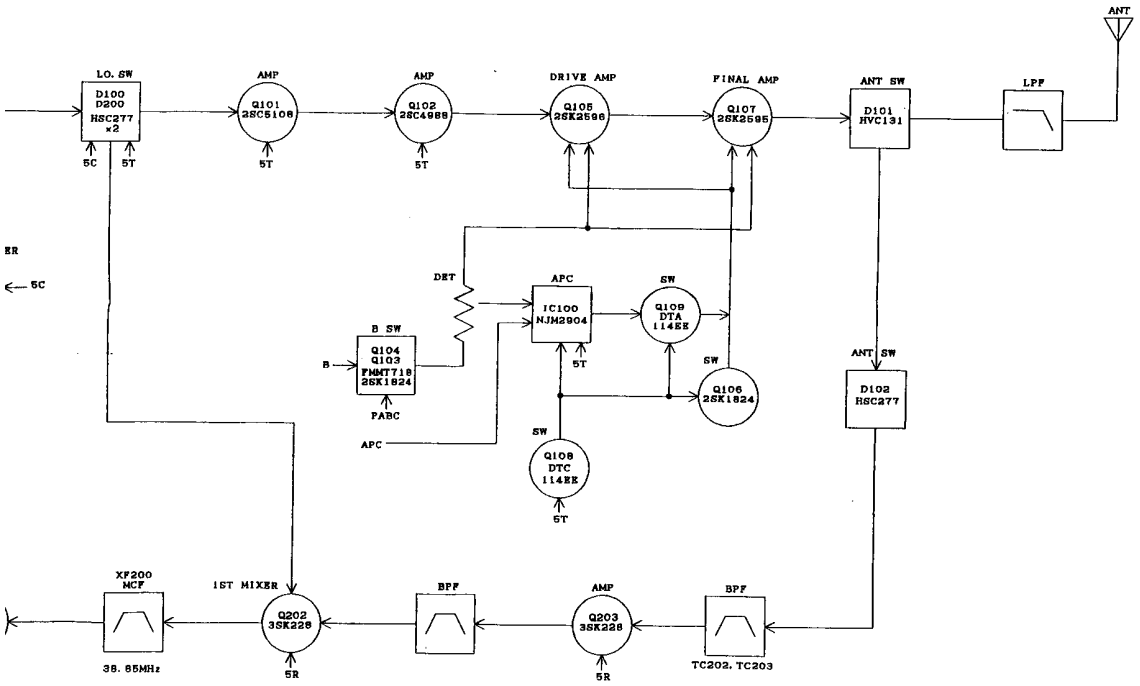

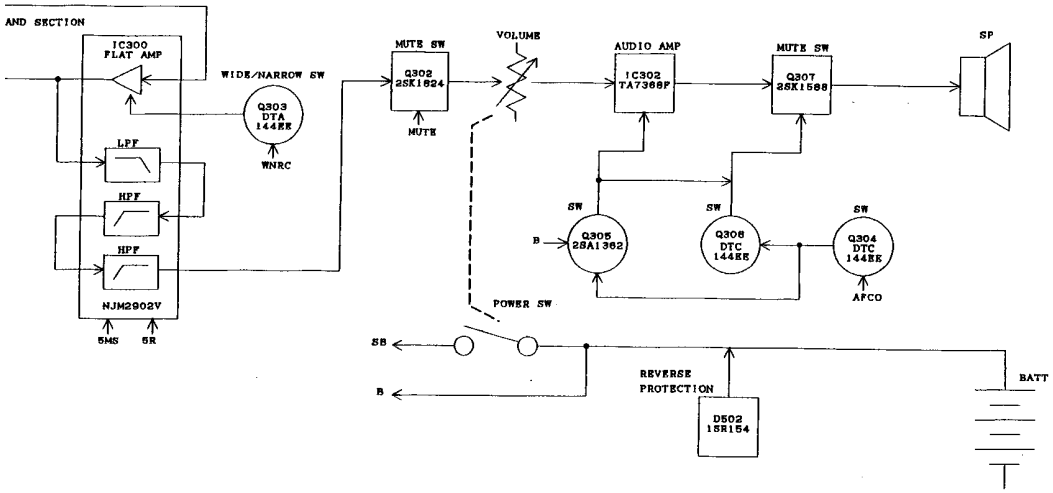

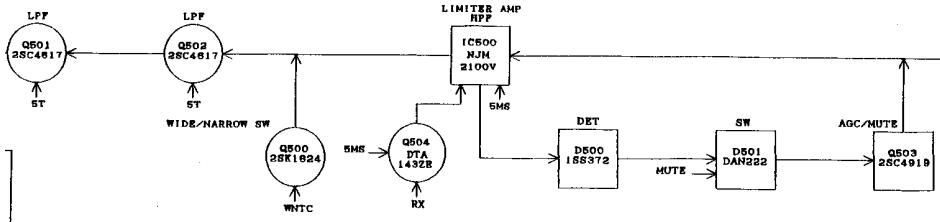

TK-3100/3101

DESIGNED	DRAWN	CHECKED	APPROVED	PARTS NAME
1997. 11. 12 T. SATO	1996. 07. 15 K. MIYAZAKI	27/Jul/98 K. Kadowaki	29/Jul/98 K. Kadowaki	EX2730/2926 BLOCK DIAGRAM
				PARTS NUMBER