CONFIDENTIAL

SONY

LOCALLY PROCURED PART

COUNTRY OF ORIGIN (THAILAND)

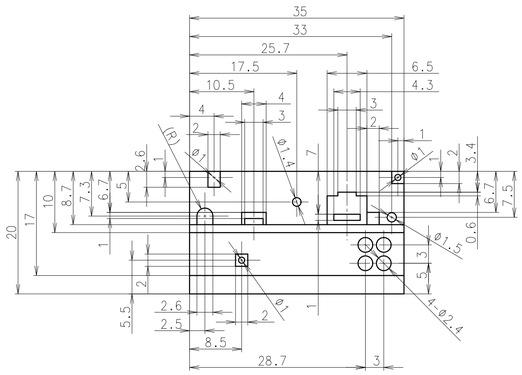

A(LINE WIDTH 0.2)

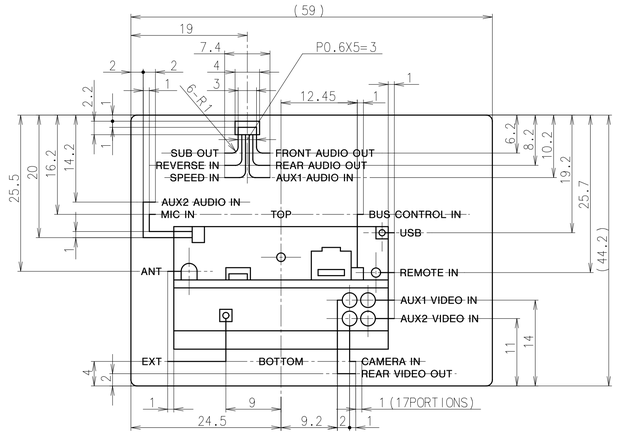

B(LINE WIDTH 0.2)

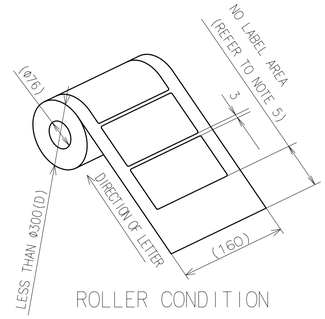

ROLLER CONDITION

WRITTEN LETTERS	LETTER HEIGHT	TYPE FACE
SONY®	L=13	SONY LOGOTYPE WITH ® SYMBOL (NO.2)
MODEL NO.	1.2	NEW SONY ID TYPE HR
SERIAL NO.		
XNV-660BT	2	NEW SONY ID TYPE HRC
AV Navigation	2	NEW SONY ID TYPE HR
FREQUENCY RANGE	1.5	
FM...,AM..		
DC:12V⎓GROUND		
MADE IN THAILAND	1.2	
PART NUMBER	1	
⎓	α=2	REFER TO CLEAN PROOF
TOP, BOTTOM	1.2	NEW SONY ID TYPE HR
SUB OUT		
REVERSE IN		
SPEED IN		
FRONT AUDIO OUT		
REAR AUDIO OUT		
AUX1 AUDIO IN		
BUS CONTROL IN		
USB		
REMOTE IN		
AUX1 VIDEO IN		
AUX2 VIDEO IN		
CAMERA IN		
REAR VIDEO OUT		
AUX2 AUDIO IN		
MIC IN		
ANT		
EXT		
FCC ID:AK8XNV660BT	1.8	
IC :409B-XNV660BT		
Manufactured~Laboratories.	1.5	NEW SONY ID TYPE HRC
THIS DEVICE~OPERATION	1	
CERTIFICATION	3	UNIVERS MEDIUM EXTRA CONDENSED(MUSEUM)
SONY CORPORATION	2.5	
PRODUCT~MANUFACTURE.	1.4	UNIVERS MEDIUM CONDENSED(MUSEUM)
STT MANUFACTURED:		
MONTH, YEAR		
1-7-1~Japan	1.3	
NTSC	2.5	NEW SONY ID TYPE HR
	α=8	REFER TO CLEAN PROOF
(Serial Number)	3	

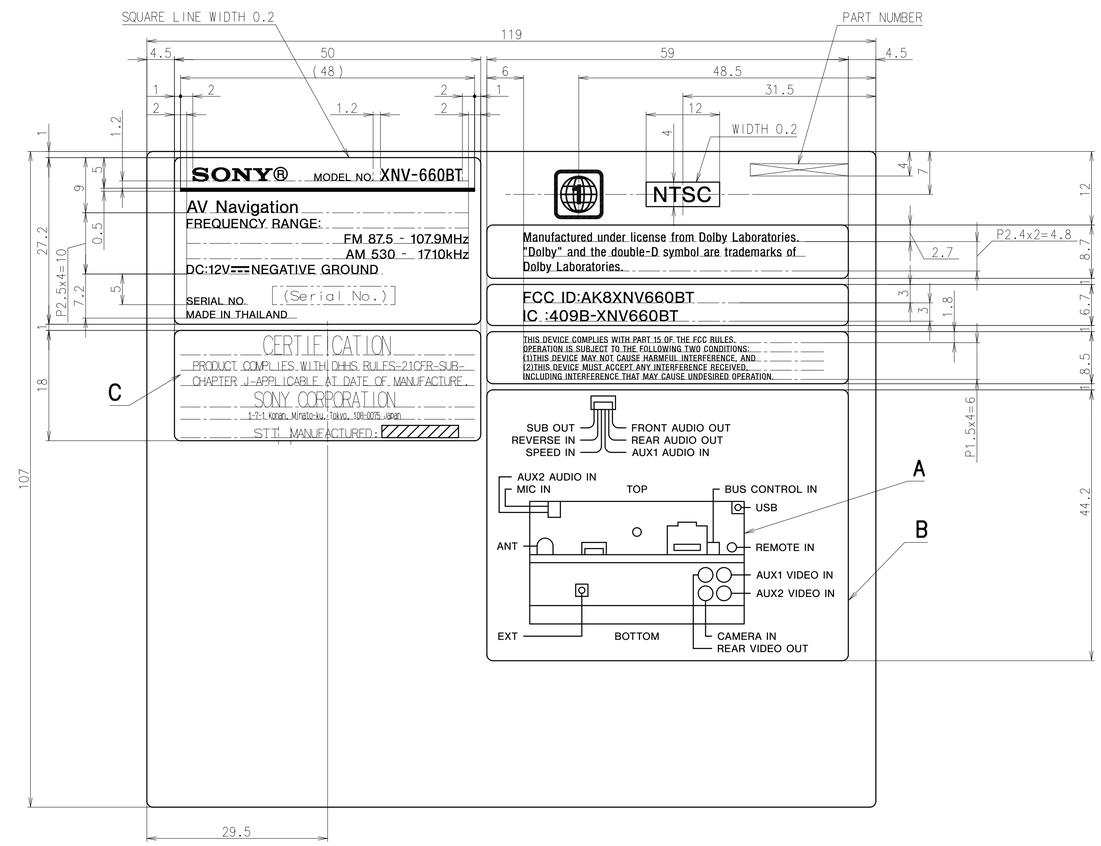

TABLE 1 : MATERIALS SPECIFICATION				
ITEM	POLYESTER FILM		POLYESTER-BASE + ALUMINUM DEPOSITION	
	PRODUCT NAME	MAKER	PRODUCT NAME	MAKER
1	OVER LAMINATE LABEL	THAI KK	TLSM50	TAIWAN KK
2	PETN25 NPL 6LK	LINTEC	TLSMB50	THAI KK
CHOOSE ONE MATERIAL ITEM IN THE SAME ROW FROM THIS TABLE FOR MAKE PART				

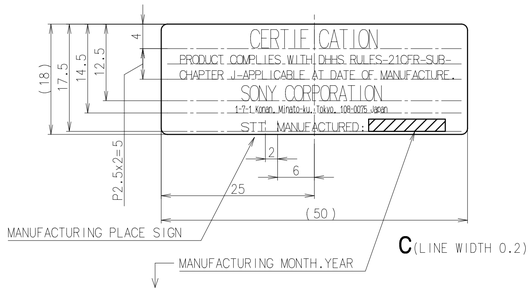

INDICATION METHOD OF MANUFACTURING DATE

MANUFACTURED:NAME OF MONTH,YEAR(FOUR FIGURES)

EXAMPLE

STT MANUFACTURED:May,2009

NAME OF MONTH(NO ABBREVIATION)

January	July
February	August
March	September
April	October
May	November
June	December

※REFER TO (C-4010-057-2) FOR DETAIL OF THE PRINT.

MATERIAL CONSTRUCTION TABLE

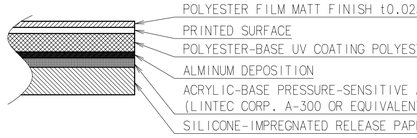

QUALITY CHARACTERISTICS:ALL CHARACTERISTICS SPECIFIED IN CLAUSE 7 OF SS-00077 "SPECIFICATION LABELS-PARTS DESIGN STANDARDS" MUST BE SATISFIED.

NOTE 1) THE ADDED Serial No. IS TO BE DETERMINED UNDER INSTRUCTIONS FROM THE MATERIAL SECTION OF ORDERING FACTORY.
2) POSITION OF SERIAL NO.(REFER TO RIGHT)
TOLERANCE OF SIZE MUST BE ±0.5.
3) DELIVERY SHALL BE IN ROLLED CONDITION.
4) UNLESS OTHERWISE SPECIFIED,ROUNDING SHALL BE R1.
5) NO LABEL AREA MUST BE LONG ENOUGH TO COVER OUTSIDE SURFACE OF THE ROLLER (øD).

SERIAL NO. (Serial Number) 7 ±0.1

この部品には SS-00259-1 記載定する物質を含んだ材料は、使用してはならない。
This part should not contain any substances which are specified in SS-00259-1.
紙形用粘着・インキ・塗料・被覆電線はグリーンパートナー認定取引先から調達すること。
Purchase ink,paint,wire rods,and molding resins only from the business partners that Sony approves as Green Partners.

HISTORY	SUFFIX	ECN-NO.	REVISION	SIGN.
A COUNT	REPL	DATE		

DRAWN BY	PLANNED BY	CHECKED BY	APPROVED BY
PIAS-PE '10.06.08 MORISHITA	PIAS-PE '10.06.08 MORISHITA		

TENTATIVE

MODEL SJ-V037

PART NO. 0-459-066-01

UNIT mm

ANGLE

SCALE 2:1

TOLERANCE		STS-1	USED ON
LS	4	±0.2	
4 CLS	16	±0.4	
16 CLS	63	±0.6	
63 CLS	250	±0.8	
250 CLS	400	±0.9	
400 CLS	1000	±1.0	
1000 CLS	2000	±3	
2000 CLS	4000	±4	

RANK

FAMILY

ORIGINAL MODEL XNV-660BT//Q(U)

MATERIAL(COLOR) BPA+Al+PSA REFER TO ABOVE

FINISH(COLOR) BASE:SILVER LETTER:BLACK

TITLE/DESCRIPTION

(EE) LABEL MODEL NUMBER(U)

(EJ) ﾋｮｳﾒﾝﾊﾞﾝ(U)

PART NO. ~~4-197-957-01~~

SHEET 1/1

THIS DOCUMENT IS THE PROPRIETARY PROPERTY OF SONY. ITS USE IS AUTHORIZED ONLY FOR RESPONDING TO A REQUEST FOR QUOTATION OR FOR THE PERFORMANCE OF WORK FOR SONY. ALL QUESTIONS MUST BE REFERRED TO THE LOCAL PURCHASING DEPARTMENT OF SONY. THE REPRODUCTION, DISTRIBUTION AND UTILIZATION OF THIS DOCUMENT AS WELL AS THE COMMUNICATION OF ITS CONTENTS TO OTHERS WITHOUT EXPRESS AUTHORIZATION IS PROHIBITED. OFFENDERS WILL BE HELD LIABLE FOR THE PAYMENT OF DAMAGES. ALL RIGHTS RESERVED IN THE EVENT OF THE GRANT OF A PATENT, UTILITY MODEL OR DESIGN.COPYRIGHT RESERVED.

ISSUED '10.06.08

F SDEC - D12

A1 '09.4

CATIA