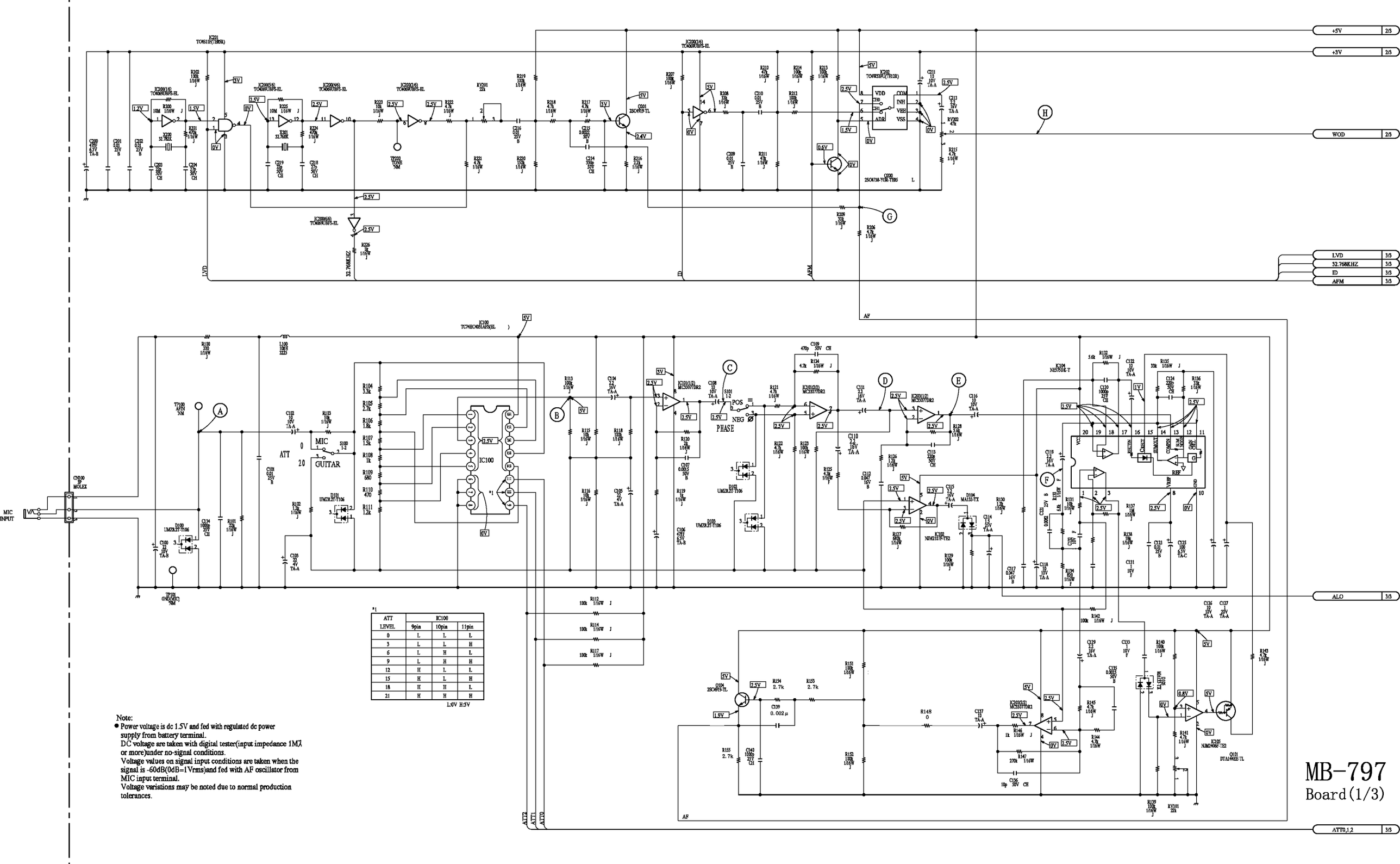

*1

ATT LEVEL	IC100 9pin	IC100 10pin	IC100 11pin
0	L	L	L
3	L	L	H
6	L	H	L
9	L	H	H
12	H	L	L
15	H	L	H
18	H	H	L
21	H	H	H

L:0V H:5V

Note:

- Power voltage is dc 1.5V and fed with regulated dc power supply from battery terminal.
  DC voltage are taken with digital tester(input impedance 1MΩ or more)under no-signal conditions.
  Voltage values on signal input conditions are taken when the signal is -60dB(0dB=1Vrms)and fed with AF oscillator from MIC input terminal.
  Voltage variations may be noted due to normal production tolerances.

MB-797

Board(1/3)

Note:
- Power voltage is dc 1.5V and fed with regulated dc power supply from battery terminal.
  DC voltage are taken with digital tester(input impedance 1M or more)under no-signal conditions.
  Voltage values on signal input conditions are taken when the signal is -60dB(0dB=1Vrms)and fed with AF oscillator from MIC input terminal.
  Voltage variations may be noted due to normal production tolerances.

Ref No	U62	U66
CP300	MVU-773S	MVU-799S
CP301	SI-7SGL0770M	SI-7L0794M

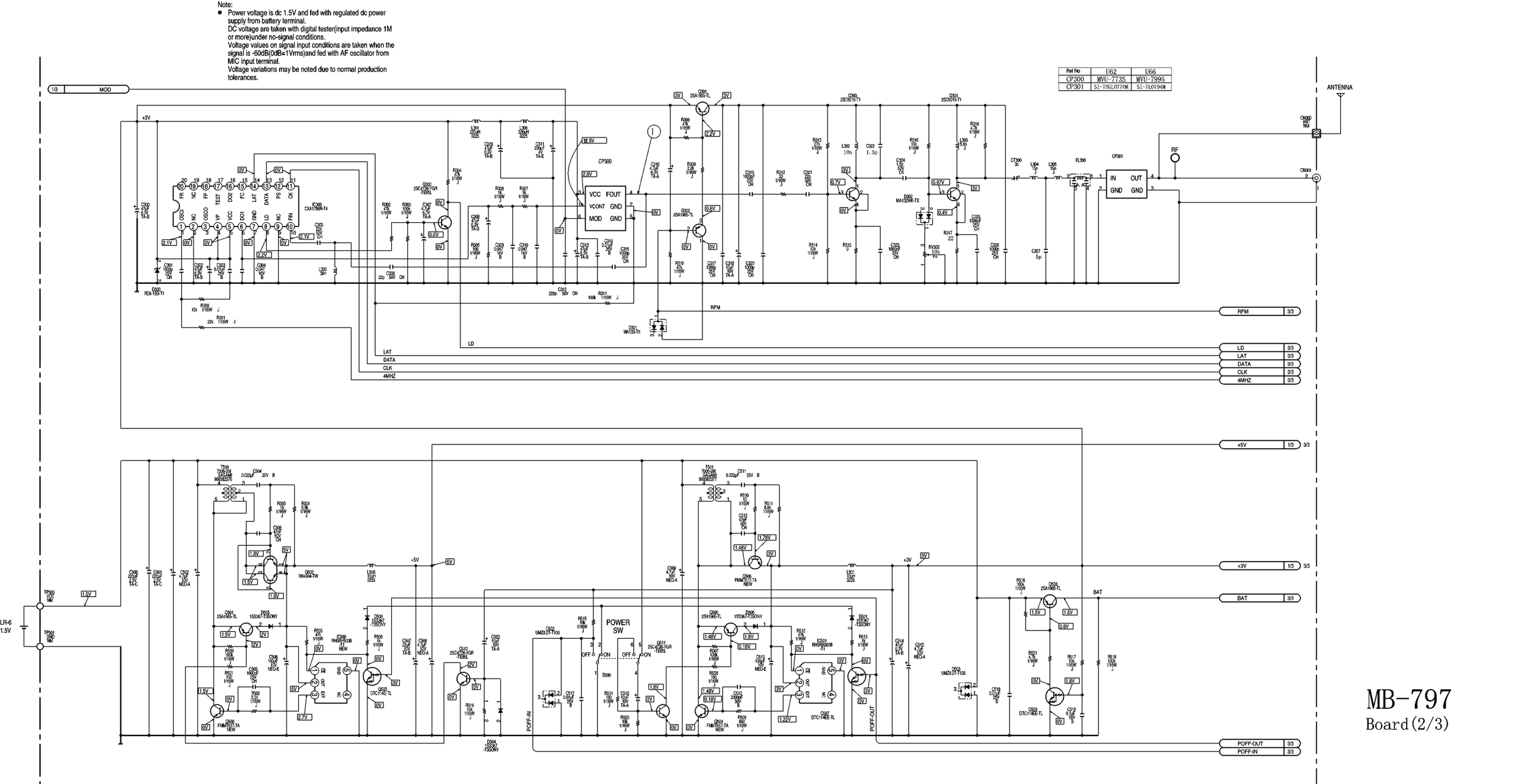

# MB-797
Board(2/3)

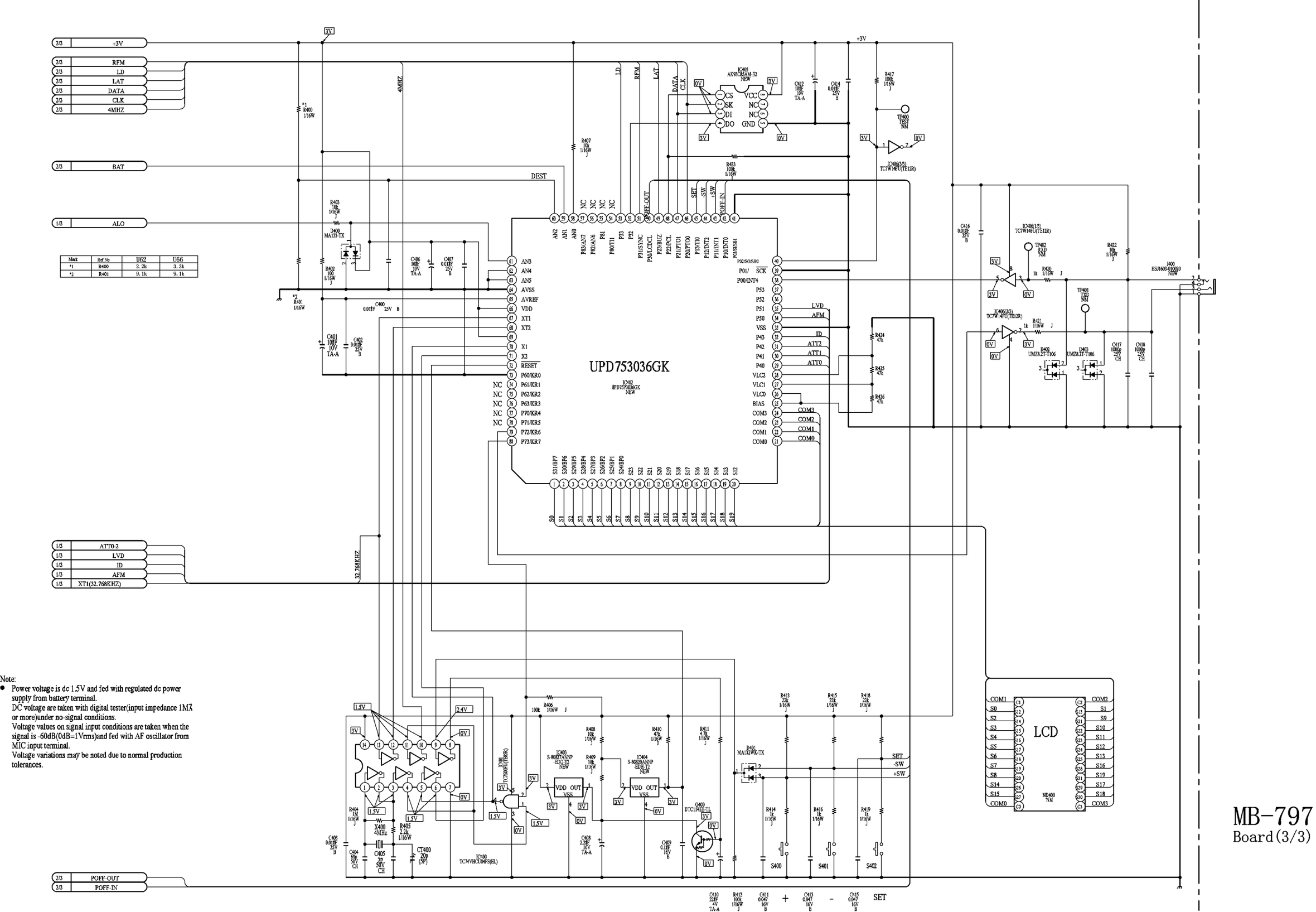

Mark	Ref No	U62	U66
*1	R400	2.2k	3.3k
*2	R401	9.1k	9.1k

Note:

- Power voltage is dc 1.5V and fed with regulated dc power supply from battery terminal.
  DC voltage are taken with digital tester(input impedance 1MΩ or more)under no-signal conditions.
  Voltage values on signal input conditions are taken when the signal is -60dB(0dB=1Vrms)and fed with AF oscillator from MIC input terminal.
  Voltage variations may be noted due to normal production tolerances.

# MB-797
Board(3/3)