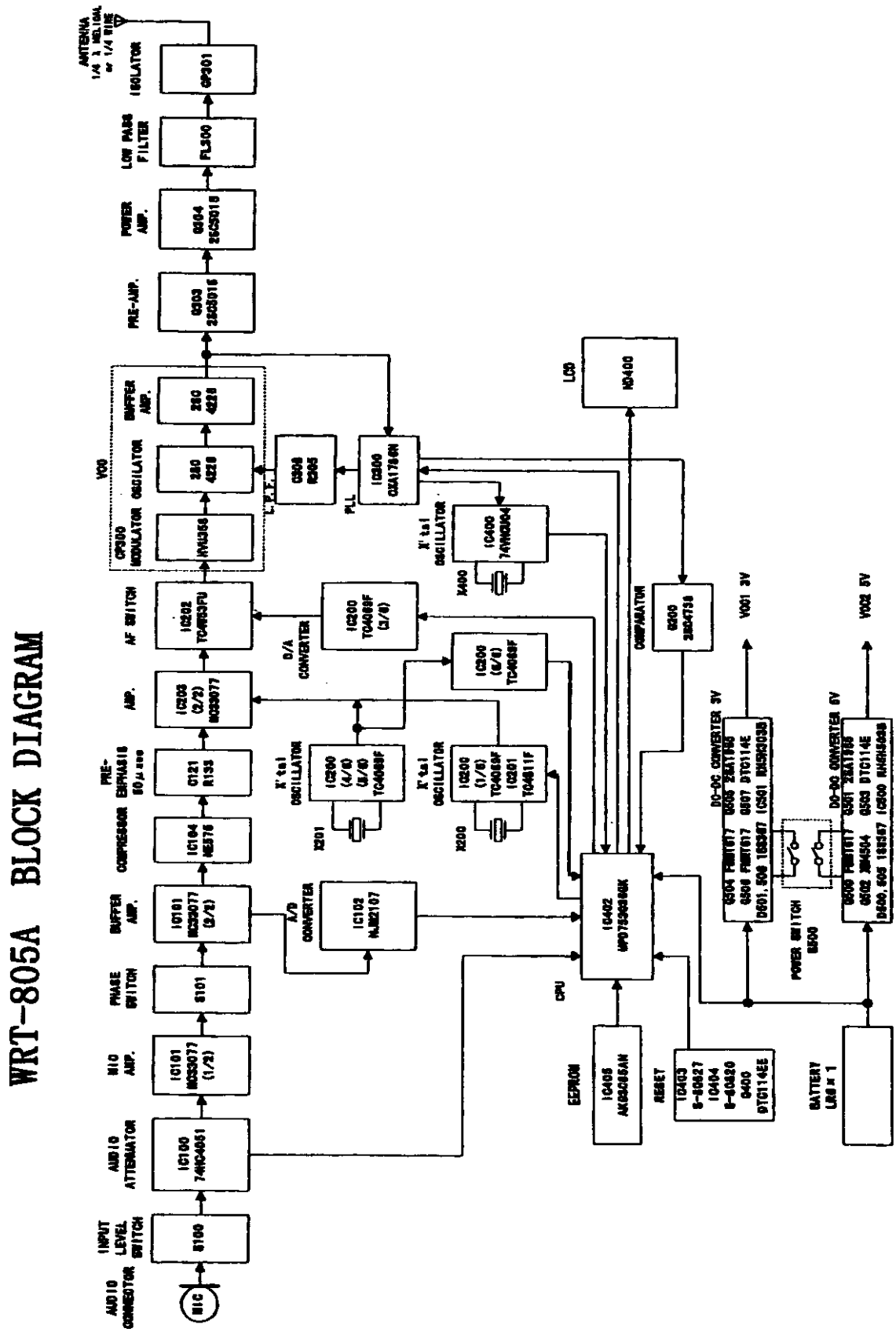(d)- (6) Function of each semiconductor (Block diagram):