SCHEMATIC DIAGRAM INDEX FOR MODEL: **SLV-M91HF**

(回路図リスト)

NO.	SCHEMATIC DIAGRAM (S NO)	NAME OF PWB	M91HF
1	S-0121-001-11	FRAME HARNESS	○
2	S-0121-002-11	SRV886UC	○
3	S-0121-003-11	MA-360 (1/9) PS	○
4	S-0121-003-21	MA-360 (2/9) SS	○
5	S-0121-003-31	MA-360 (3/9) TT	○
6	S-0121-003-41	MA-360 (4/9) VA	○
7	S-0121-003-51	MA-360 (5/9) HIFI	○
8	S-0121-003-61	MA-360 (6/9) TU	○
9	S-0121-003-71	MA-360 (7/9) RP	○
10	S-0121-003-81	MA-360 (8/9) ARC	○
11	S-0121-003-91	MA-360 (9/9) AV-BUS	○
11	S-0121-004-11	DRUM MOTOR(SDV-11B)	○
12	S-0121-004-21	DRUM MOTOR(DMVDMT04F)	○
13	S-0121-004-31	CAPSTAN MOTOR	○
14	S-0121-005-11	TUNER (BTF-MA431)	○
15	S-0121-006-11	FR-163	○
16	S-0121-007-11	DM-87	○
17	S-0121-008-11	PD-111	○
18	S-0121-009-11	LR-15	○
19			
20	S-0121-011-11	ML-18	○
21	S-0121-012-11	AN-18, AN-19	○
22	S-0121-014-11	VD-29	○
23	S-0121-015-11	JK-172	○
23	S-0121-016-11	Control Switch Block	○

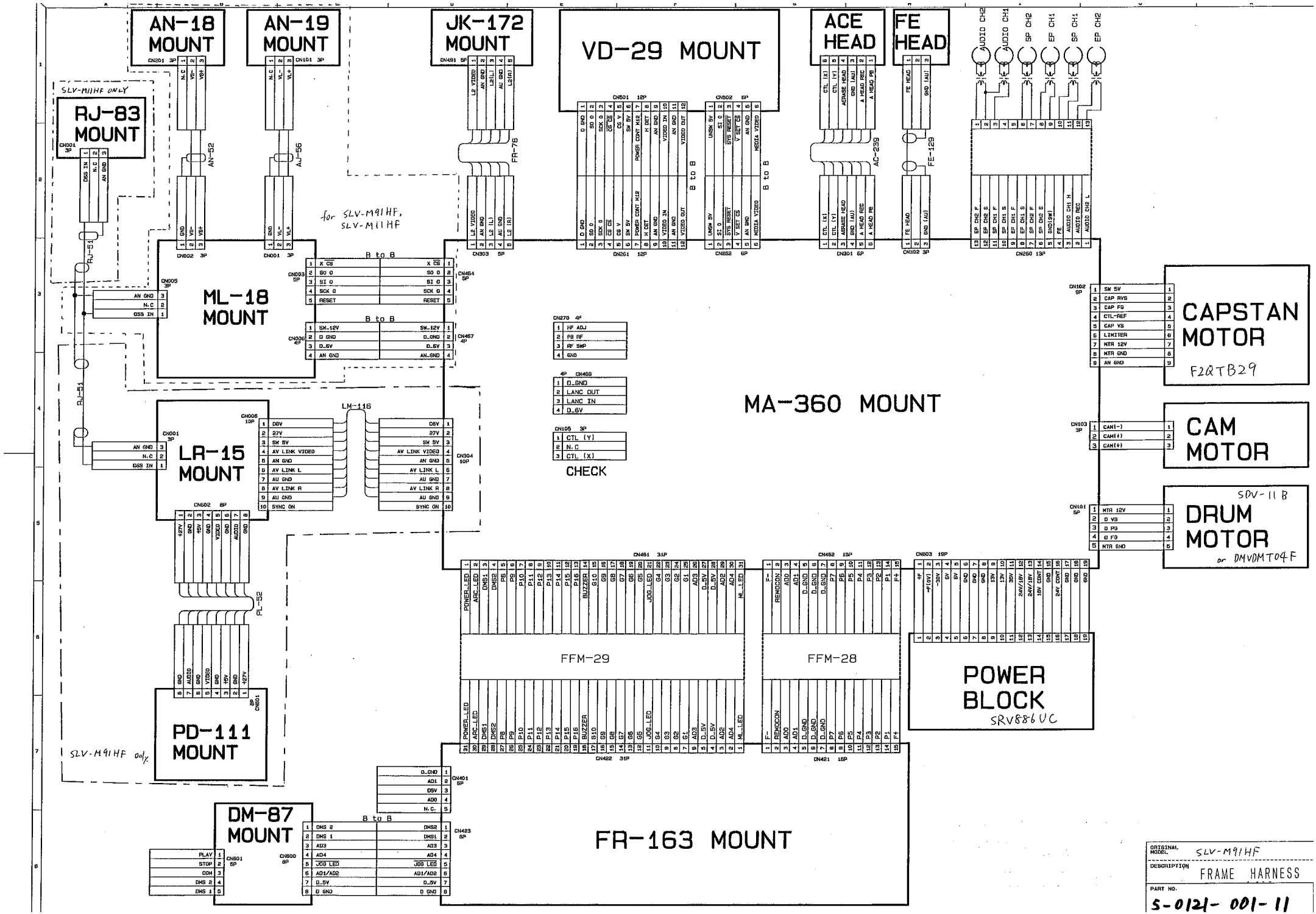

ORIGINAL MODEL: SLV-M91HF

DESCRIPTION: FRAME HARNESS

PART NO. 5-0121-001-11

SYM.	REVISION	DATE	N

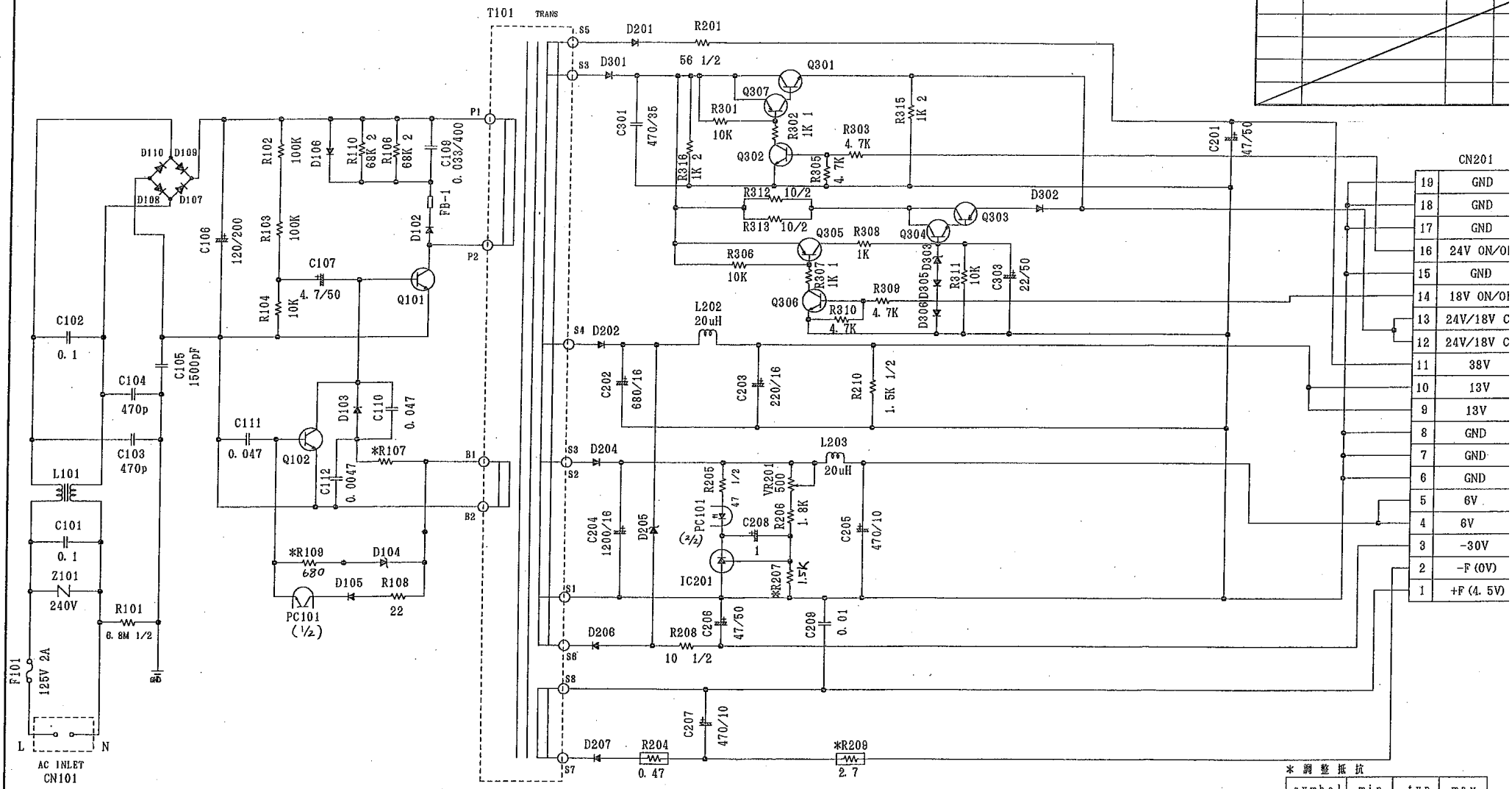

D102	PR1005 or AG01A	D201	PR1003 or ERA18-02
D103	ERA15-02 or 11ES2	D202, D301	UF3DL or RL4Z or S3L20U
D104	MTZJ3.0 or MA4030 or RD3.0ES	D204	SB340L or RK44 or D3S4M
D105	1SS119 or MA165	D205	BZX85C51 or MA2510 or RD51F
D106	1N4005	D206, 207	PR1003 or ERA18-02
D107, D108	1N4005	IC201	AN1431T or HA17431P
D109, D110	1N4005		
Q101	2SC4054 or 2SC4130	D302	D2S4M
Q102	2SC4040	D303	MTZJ18 or MA4180
PC101	ON3131 or PS2501	D305, D306	1SS119 or MA165
		Q301, Q303	2SD2394
		Q302, Q306	2SC1740
		Q304	2SC2785
		Q305	2SB1240
		Q307	2SA1015

単位		
抵抗	Ω/W (指示なきWは 1/4W)	
コンデンサ	μF/V (指示なきVは 50V)	

＊調整抵抗

symbol	min	typ	max
*R107	100/1	120/1	120/1
*R109	560	680	680
*R207	1.2K	1.5K	2.2K
*R209		2.7	

SRV886UC

DWG. No.

S-0121-002-11

MITSUMI ELEC. CO., LTD.

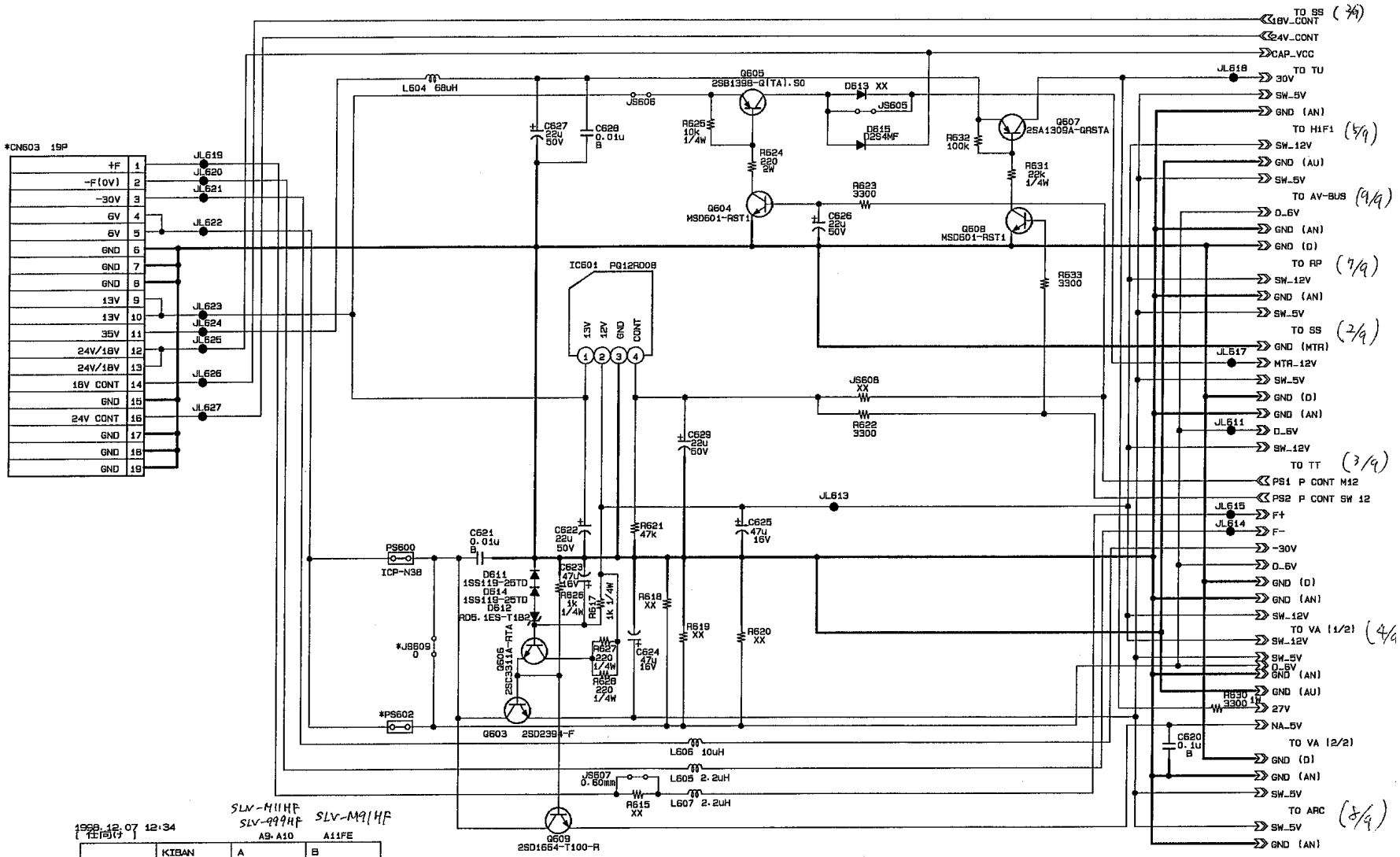

1998.12.07 12:34
[仕向け]

SLV-M11HF
SLV-999HF
A9·A10

SLV-M91HF
A11FE

	KIBAN	A	B
JS609	121629571	121629571	XX
PS602	1.5A 153267591	XX	~~1.5A~~ ICP-N38 153267591

XX means no component mounted.

ALL resistors are in ohms. 1/10 W
unless otherwise noted.

ALL capacitors are in uF(p.pF)
unless otherwise noted.

ORIGINAL MODEL SLV-M91HF

DESCRIPTION MA-360 (1/9) PS

PART NO. S-0121-003-11

SH 1/

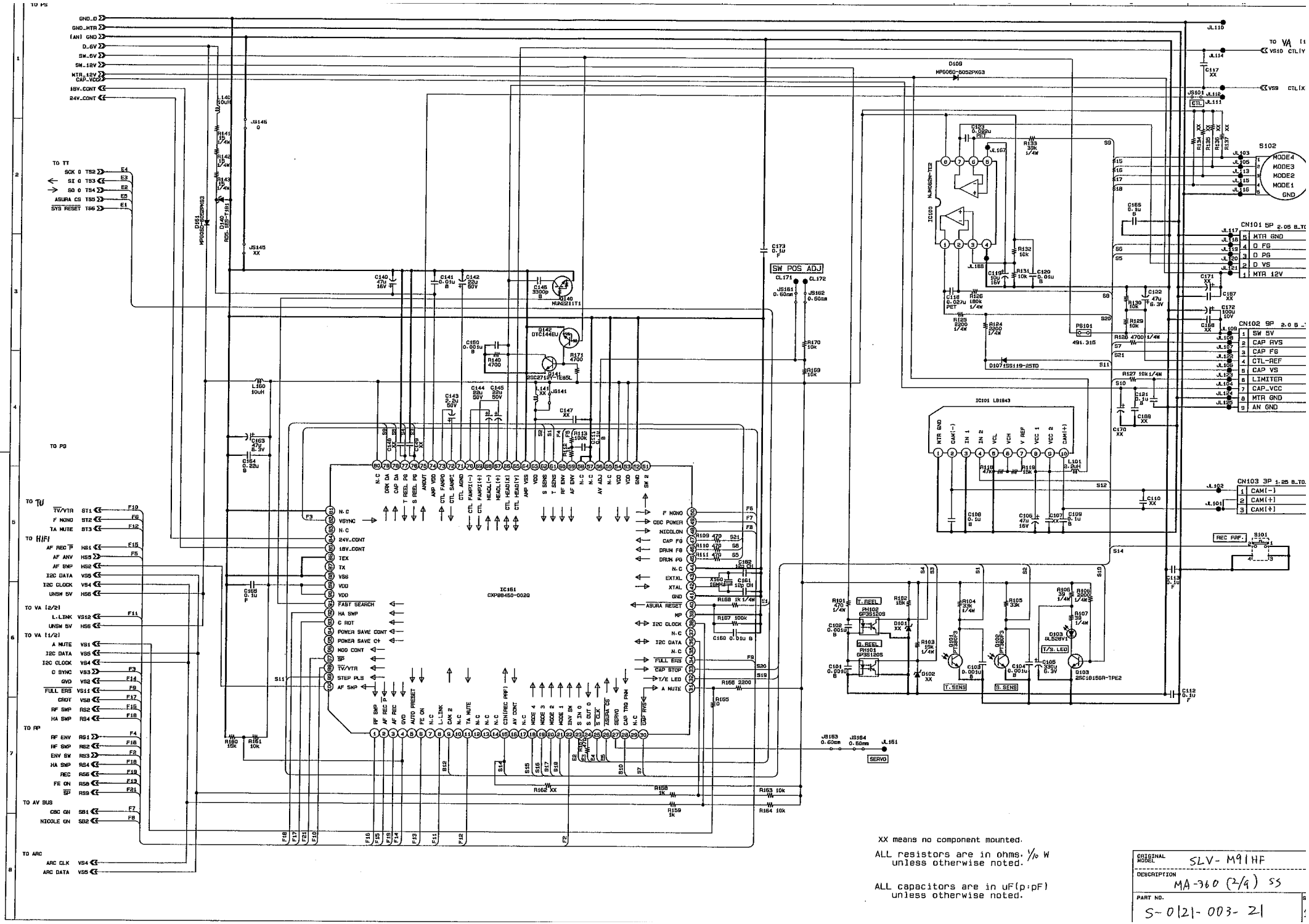

XX means no component mounted.

ALL resistors are in ohms. 1/10 W unless otherwise noted.

ALL capacitors are in uF(p:pF) unless otherwise noted.

ORIGINAL MODEL	SLV-M91HF
DESCRIPTION	MA-760 (2/9) SS
PART NO.	S-0121-003-21

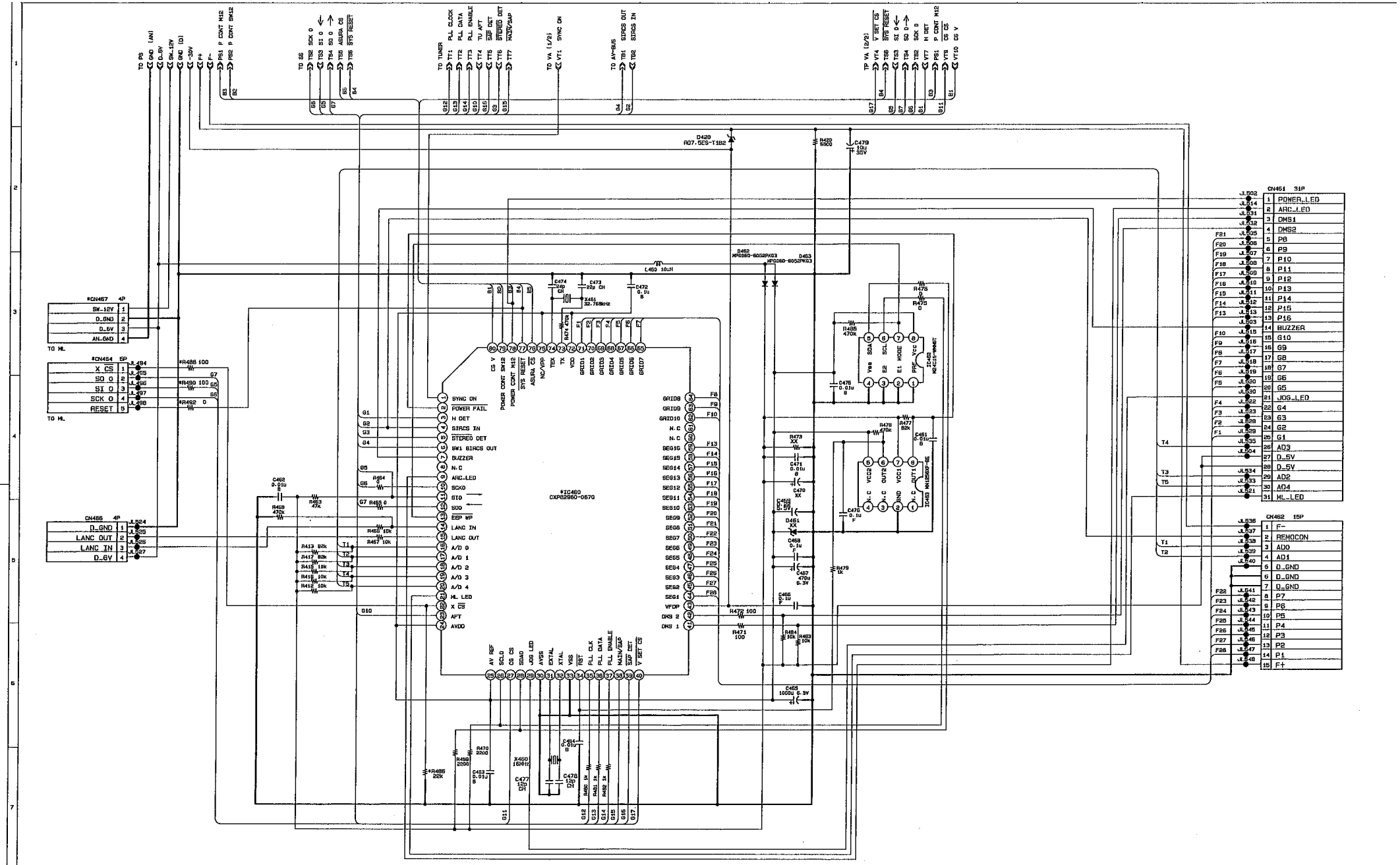

1998-12-14 15:34 [12INFO]	KIBAN	A9	A10	A11
		A	B	C
CN454	5P 177059421	XX	5P 177059421	5P 177059421
CN457	4P 177001021	XX	4P 177001021	4P 177001021
IC460	CXP82960-0 87S30348	CXP82960-0 87S30349	CXP82960-0 87S30349	CXP82960-0 87S30350
R486	22K	XX	22K	22K
R488	100	XX	100	100
R490	100	XX	100	100
R492	0	XX	0	0

SLV-999HF SLV-M11HF SLV-M91HF

XX means no component mounted.

ALL resistors are in ohms. 1/10 W unless otherwise noted.

ALL capacitors are in uF(p:pF) unless otherwise noted.

ORIGINAL MODEL SLV-M91HF

DESCRIPTION MA-360 (3/a) TT

PART NO. S-0121-003-31

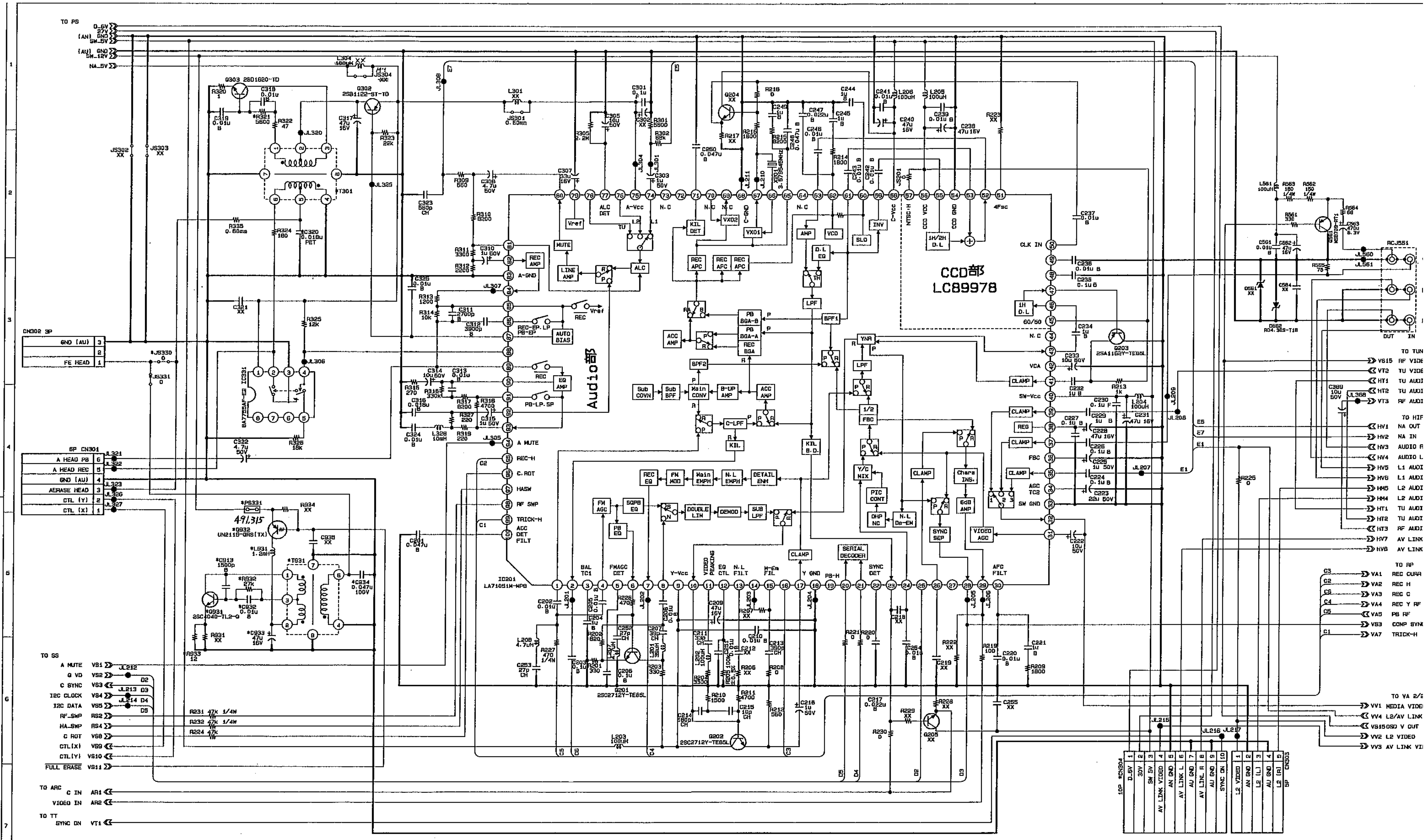

1998.10.14 16:02 [仕向け]		SLV-999HF	SLV-M11HF	SLV-M91HF
	KIBAN	A	B	C
C320	0.018u 100V	0.018u 100V	0.047u 50V	0.018u 100V
C913	1500p 50V B	1500p 50V B	XX	1500p 50V B
C932	0.01u 50V B	0.01u 50V B	XX	0.01u 50V B
C933	47u 16V	47u 16V	XX	47u 16V
C934	0.047u 100V	0.047u 100V	XX	0.047u 100V
CN304	10P 156878711	XX	XX	10P 156878711
JS330	121629571	XX	121629571	XX
JS331	121629571	121629571	XX	121629571

1998.10.14 16:02 [仕向け]		SLV-999HF	SLV-M11HF	SLV-M91HF
	KIBAN	A	B	C
L931	1.2mH ±10%	1.2mH ±10%	XX	1.2mH ±10%
PS331		491.315	XX	491.315
Q931	2SC4040-TL 872901231	2SC4040-TL 872901231	XX	2SC4040-TL 872901231
Q932	UN2115-QRS 872942146	UN2115-QRS 872942146	XX	UN2115-QRS 872942146
R225	0	0	0	XX
R321	5600	5600	3900	5600
R932	27k	27k	XX	27k
R933	12	12	XX	12
T301	143353811	143353811	143347911	143353811
T931	143353711	143353711	XX	143353711

XX means no component mounted.

ALL resistors are in ohms, 1/10 W unless otherwise noted.

ALL capacitors are in uF(p:pF) unless otherwise noted.

ORIGINAL MODEL	SLV-M91HF
DESCRIPTION	MA-360 (4/9) VA
PART NO.	S-0121-003-41

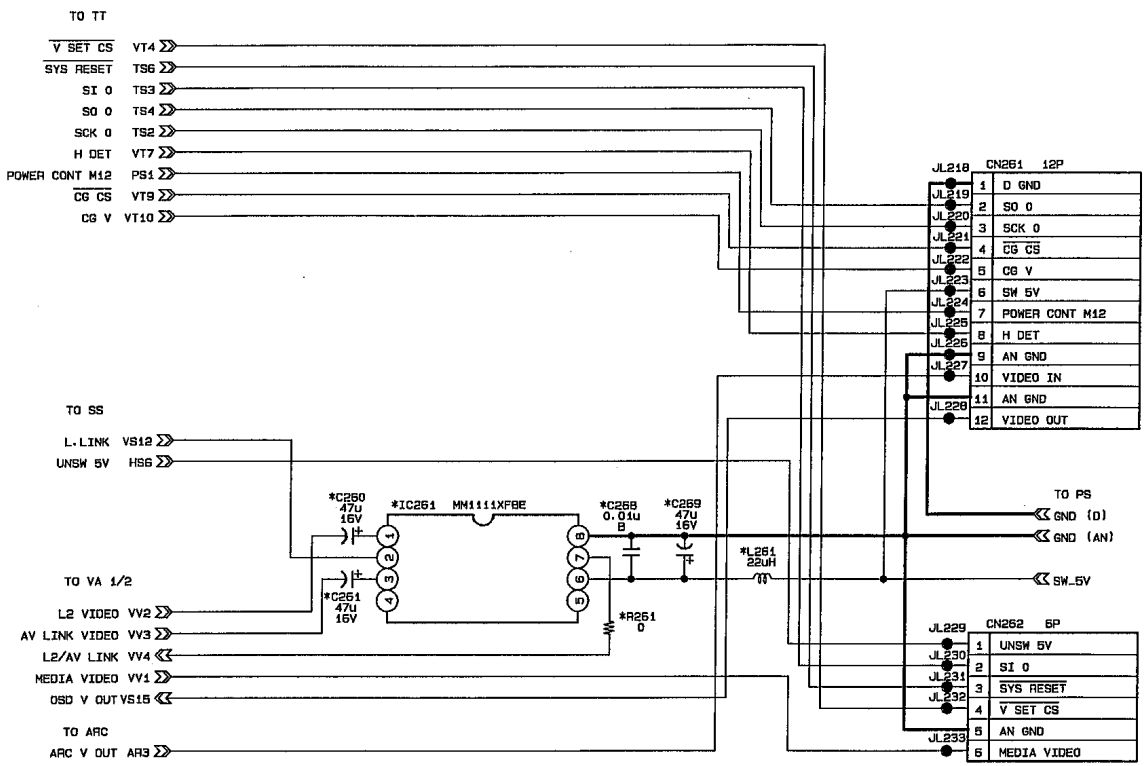

1998.09.24 15:16
[仕向け]

SLV-999HF SLV-M11HF SLV-M91HF

	KIBAN	A	B	C
C260	47u 16V	XX	XX	47u 16V
C261	47u 16V	XX	XX	47u 16V
C268	0.01u 50V B	XX	XX	0.01u 50V B
C269	47u 16V	XX	XX	47u 16V
IC261	MM1111XFBE 875943278	XX	XX	MM1111XFBE 875943278
L261	22uH ±5%	XX	XX	22uH ±5%
R261	0	XX	XX	0

Flying Erase	○	×	○
AV Leaser Link	×	×	○

XX means no component mounted.

ALL resistors are in ohms. 1/10W
unless otherwose noted.

ALL capacitors are in uF(p:pF)
unless otherwise noted.

ORIGINAL MODEL SLV-M91HF

DESCRIPTION MA-360 (4/9) VA

PART NO. 5-0121-003-41

SHEET 2/2

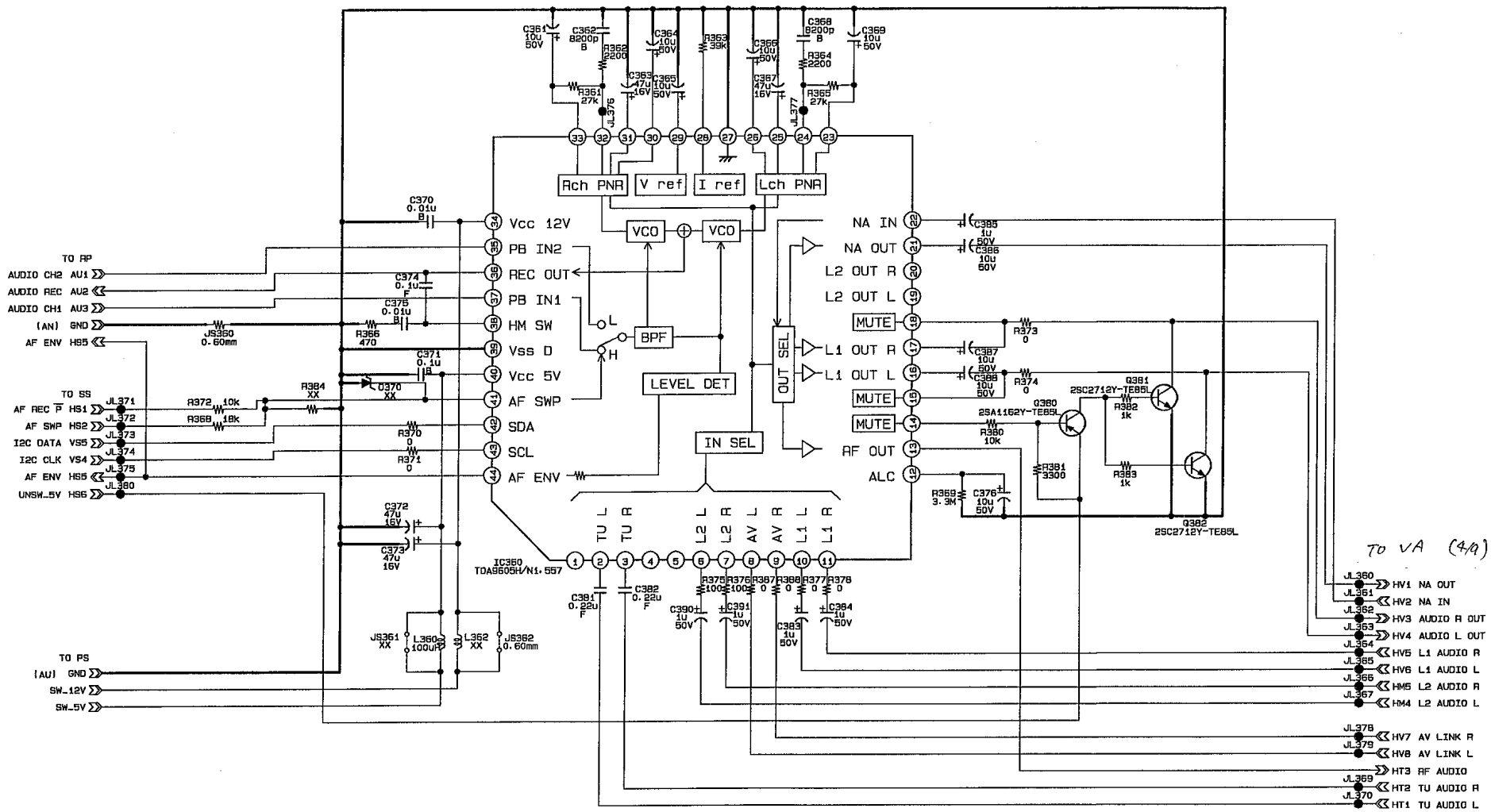

XX means no component mounted.

ALL resistors are in ohms. 1/10 W unless otherwise noted.

ALL capacitors are in uF(p.pF) unless otherwise noted.

ORIGINAL MODEL	SLV-M91HF
DESCRIPTION	MA-360 (5/9) HIFI
PART NO.	5-021-003-51
SHEET	1/

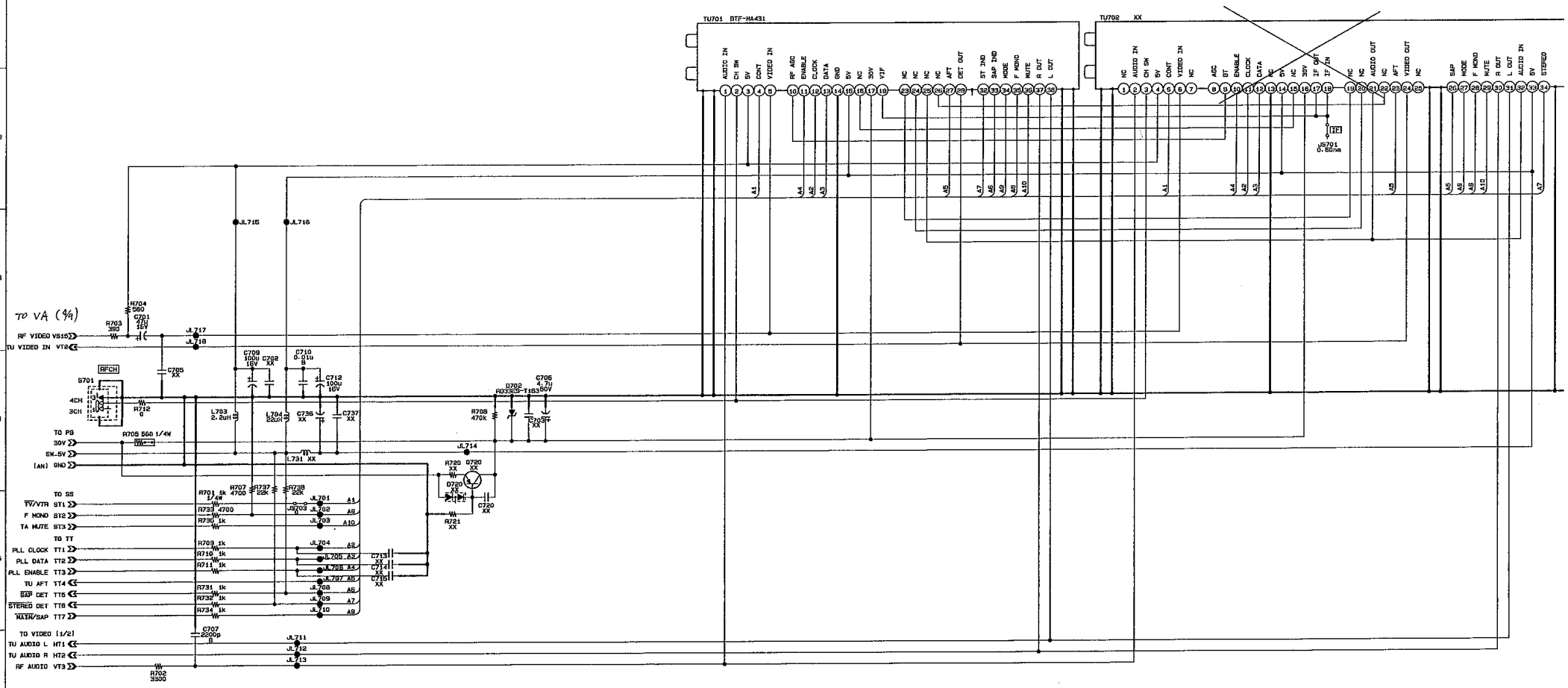

XX means no component mounted.

ALL resistors are in ohms. 1/10W unless otherwise noted.

ALL capacitors are in uF(p:pF) unless otherwise noted.

ORIGINAL MODEL	SLV-M91HF
DESCRIPTION	MA-360 (6/9) TU
PART NO.	S-0121-003-61

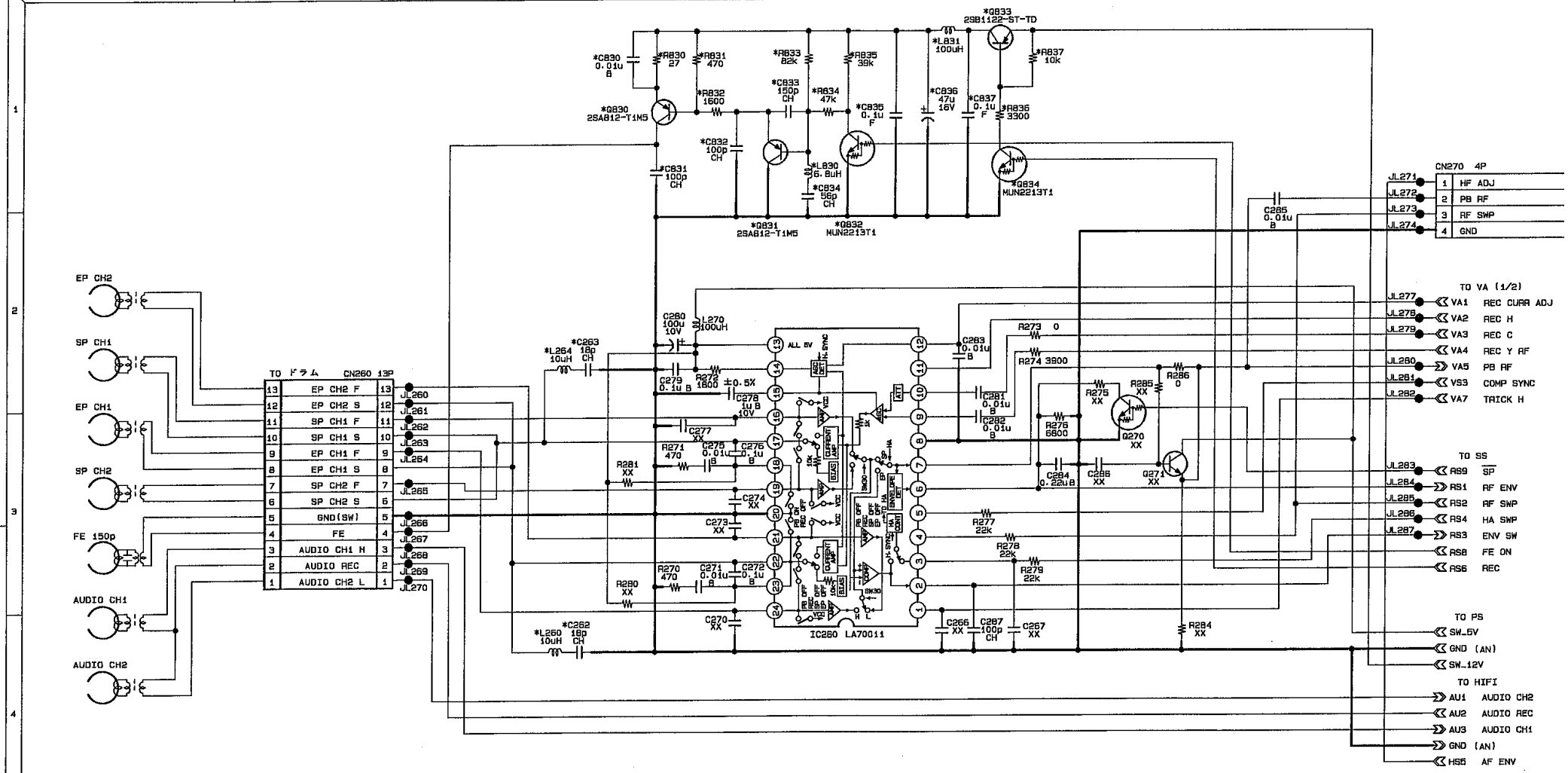

XX means no component mounted.

ALL resistors are in ohms, 1/10 W unless otherwise noted.

ALL capacitors are in uF(p.pF) unless otherwise noted.

ORIGINAL MODEL	SLV-M91HF
DESCRIPTION	MA-360 (7/9) RP
PART NO.	S-0121-003-71

1998.06.02 11:47
【仕向け】

	KIBAN	A SLV-M41HF A10	B SLV-M91HF SLV-999HF A9 FE A11 FE
C262	18p 50V CH	XX	18p 50V CH
C263	18p 50V CH	XX	18p 50V CH
C830	0.01u 50V B	XX	0.01u 50V B
C831	100p 50V CH	XX	XX
C832	100p 50V CH	XX	100p 50V CH
C833	150p 50V CH	XX	150p 50V CH
C834	56p 50V CH	XX	56p 50V CH
C835	0.1u 25V F	XX	0.1u 25V F
C836	47u 16V	XX	47u 16V
C837	0.1u 25V F	XX	0.1u 25V F
L260	10uH ±5%	XX	10uH ±5%
L264	10uH ±5%	XX	10uH ±5%
L830	6.8uH ±5%	XX	6.8uH ±5%
L831	100uH ±5%	XX	100uH ±5%
Q830	2SA812-T1M 872910271	XX	2SA812-T1M 872910271
Q831	2SA812-T1M 872910271	XX	2SA812-T1M 872910271
Q832	MUN2213T1 872902489	XX	MUN2213T1 872902489
Q833	2SB1122-ST 872982209	XX	2SB1122-ST 872982209
Q834	MUN2213T1 872902489	XX	MUN2213T1 872902489
R830	27	XX	27
R831	470	XX	470
R832	1600	XX	1600
R833	82k	XX	82k
R834	47k	XX	47k
R835	39k	XX	39k
R836	3300	XX	3300
R837	10k	XX	10k

XX means no component mounted.

ALL resistors are in ohms. 1/10 W
unless otherwose noted.

ALL capacitors are in uF(p:pF)
unless otherwise noted.

ORIGINAL MODEL	SLV-M91HF
DESCRIPTION	MA-360 (7/9) RP
PART NO.	S-0121-003-71
SHEET	2/2

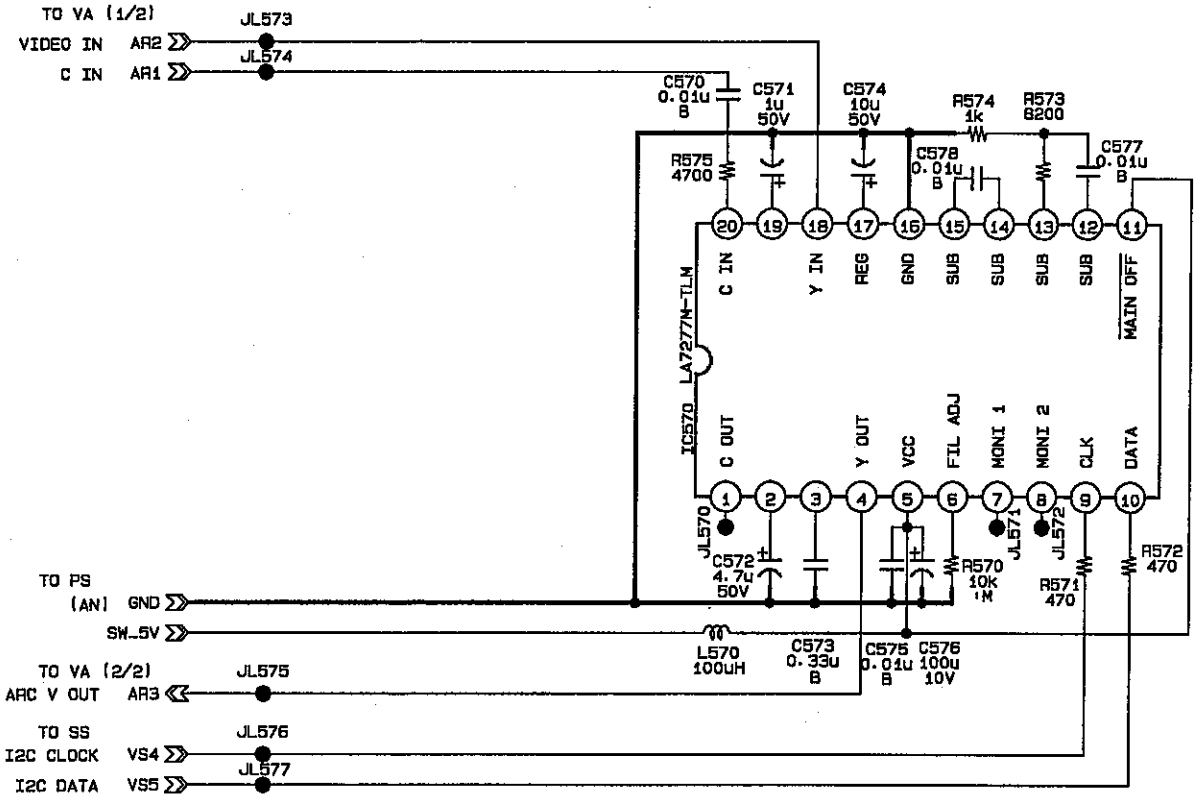

XX means no component mounted.

ALL resistors are in ohms, 1/10 W unless otherwose noted.

ALL capacitors are in uF(p:pF) unless otherwise noted.

ORIGINAL MODEL	SLV-M91HF
DESCRIPTION	MA-360 (8/9) ARC
PART NO. S-0121-003-81	SHEET 1/

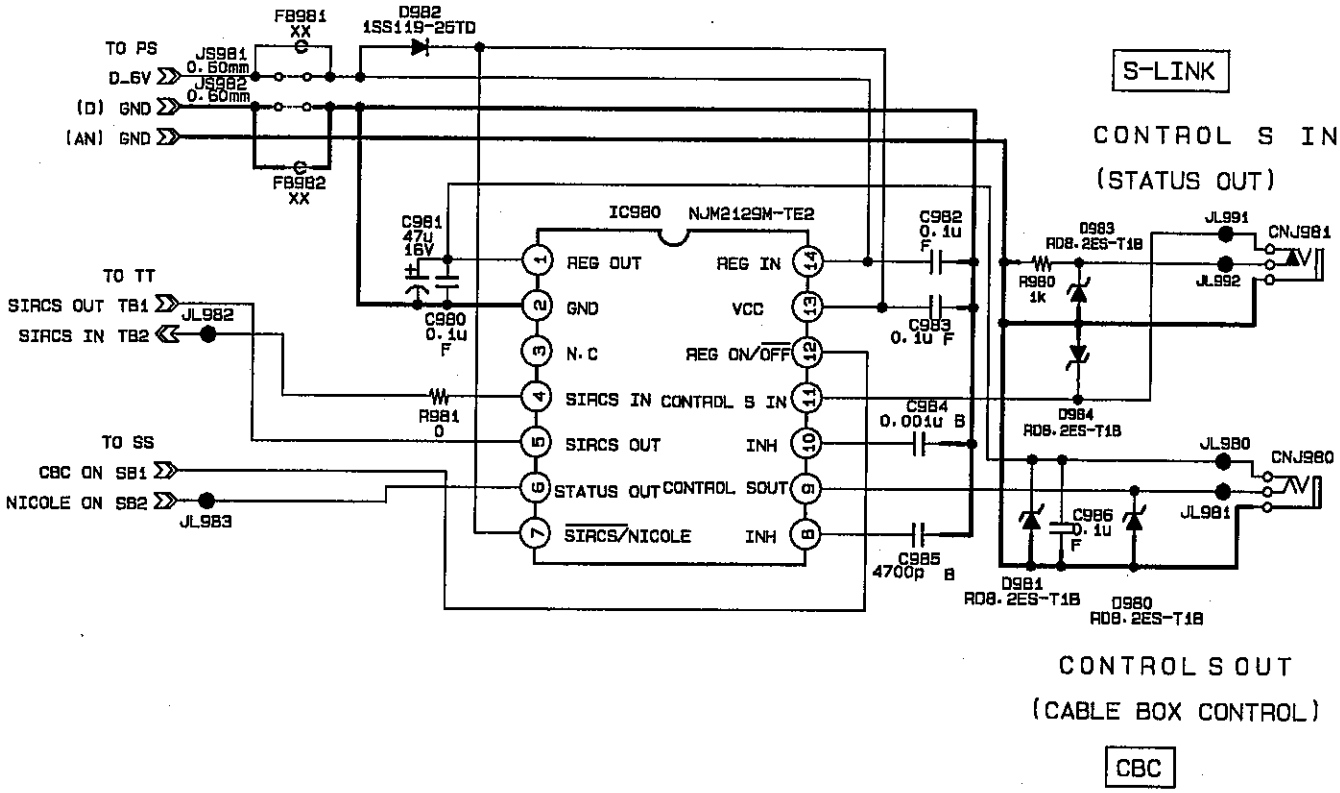

XX means no component mounted.

ALL resistors are in ohms. 1/10 W
unless otherwose noted.

ALL capacitors are in uF(p:pF)
unless otherwise noted.

ORIGINAL MODEL	SLV-M91HF
DESCRIPTION	MA-360 (9/9) AV-BUS
PART NO.	S-0121-003-91
SHEET	1/

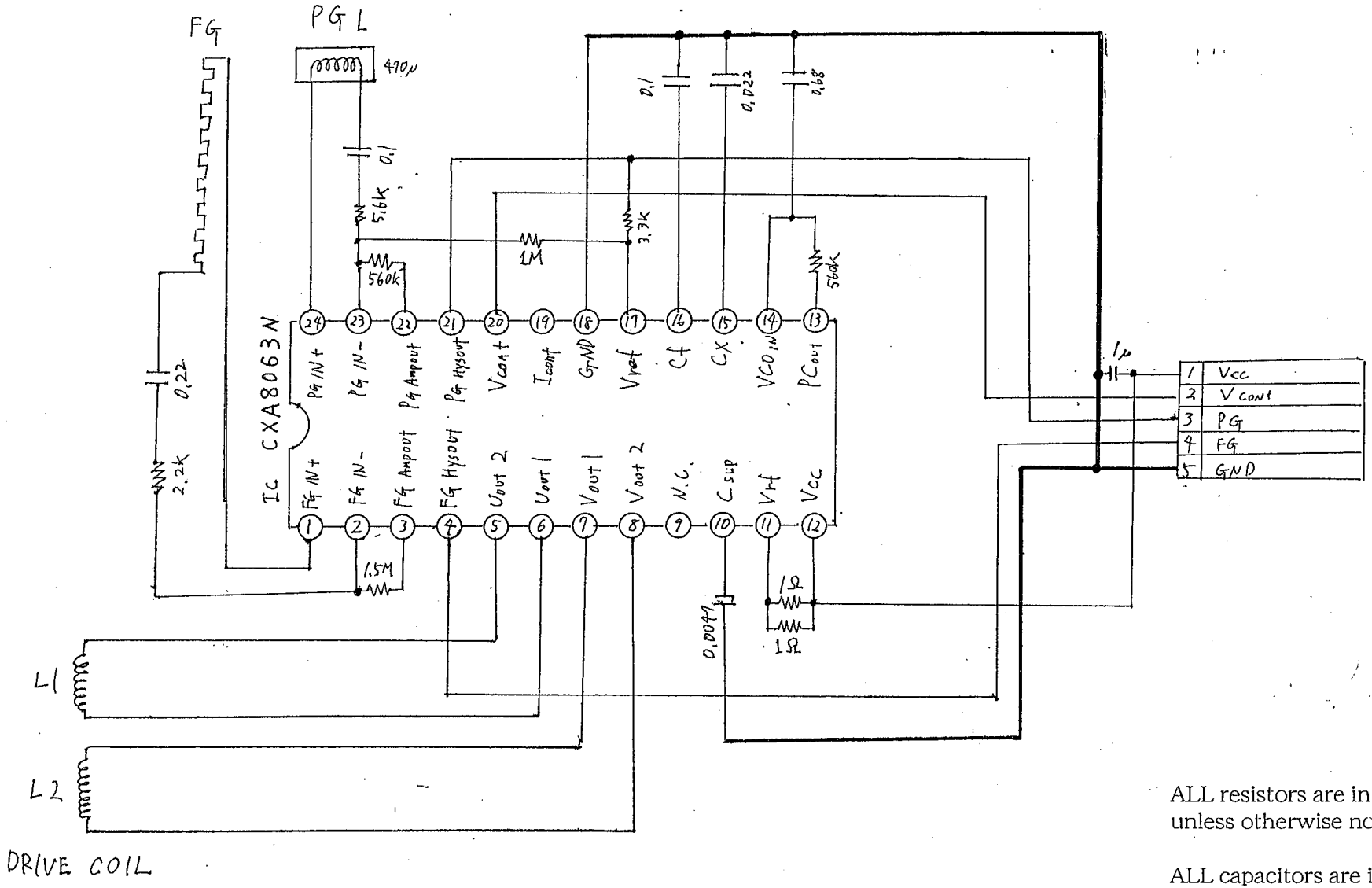

ALL resistors are in ohms, 1/10w. unless otherwise noted.

ALL capacitors are in μF unless otherwise noted.

ORIGINAL MODEL	SLV-M91HF
DESCRIPTION	DRUM MOTOR SDV-11B
PART NO.	S-0121-004-11
SHEET	/

TENTATIVE PART NO.

A3

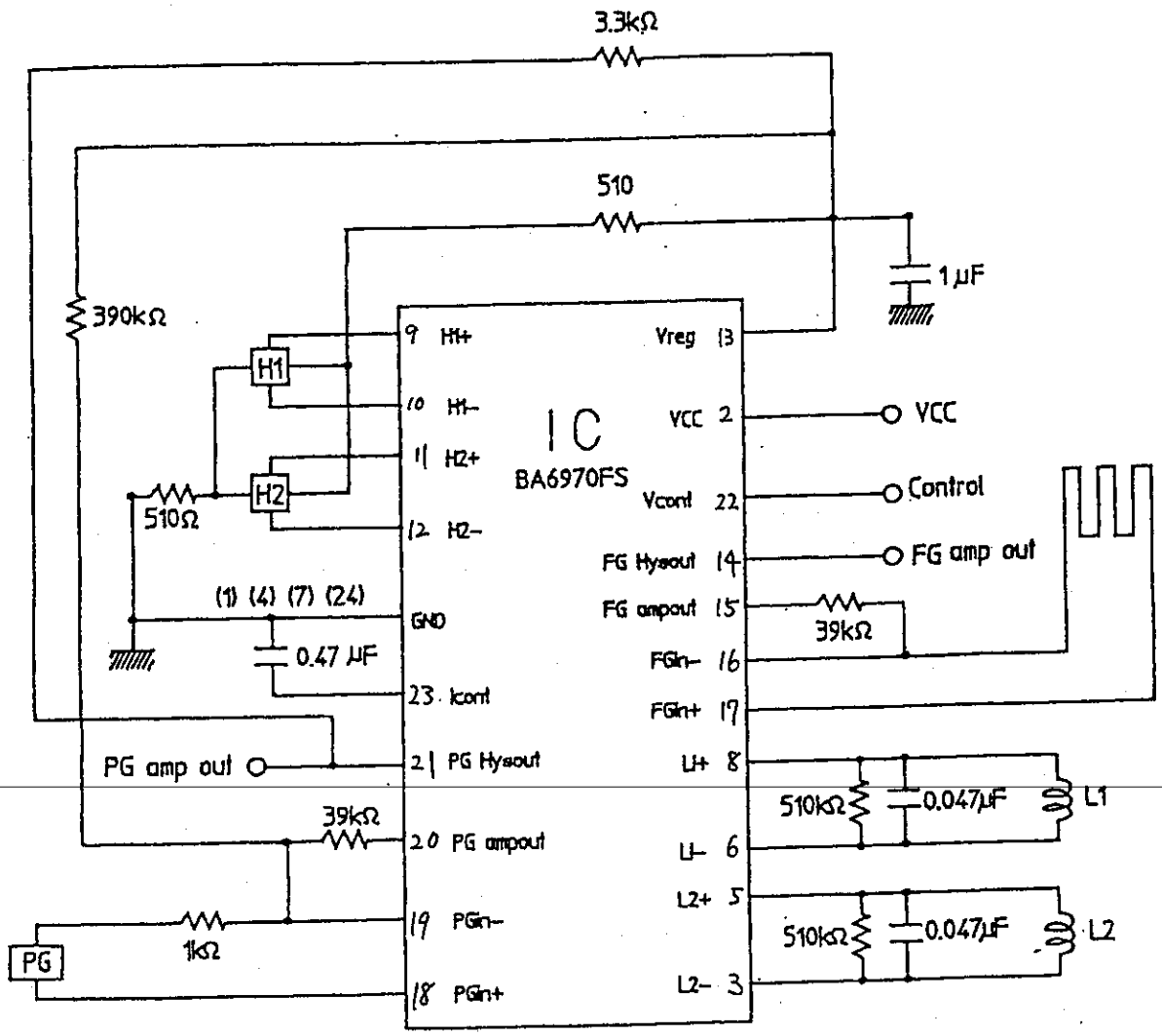

XX means no component mounted.

ALL resistors are in ohms, 1/10W
Unless otherwise noted.

ALL capacitors are in μF
Unless otherwise noted.

ORIGINAL MODEL	SLV-M91HF
DESCRIPTION	DRUM MOTOR (DMVDMT04F)
PART NO.	S-0121-004-21

SONY

Attached sheet ③

Motor circuit diagram

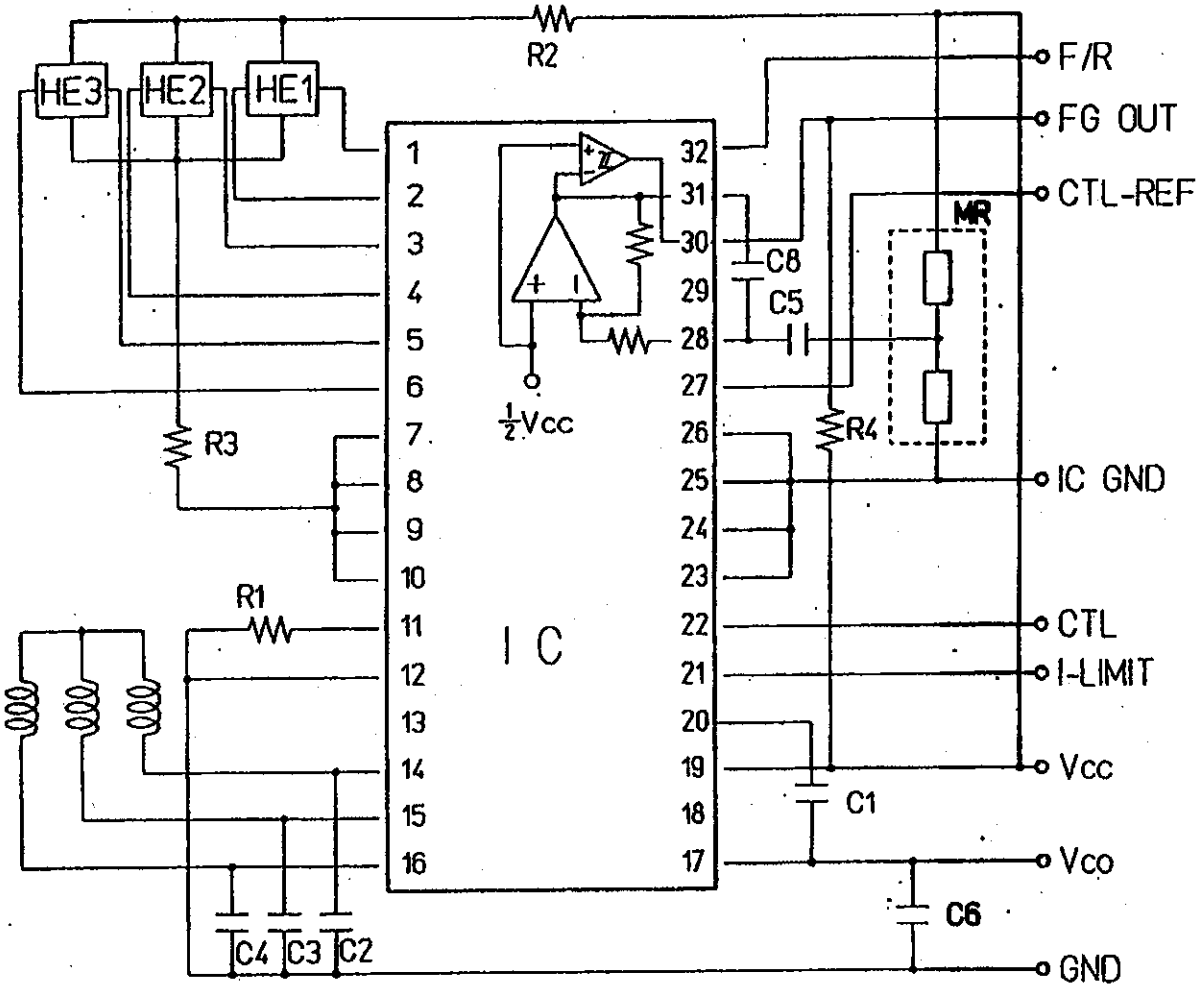

-Circuit constant-

I C	:	M56746SP
R 1	:	0.47Ω / 0.5W
R 2	:	180Ω
R 3	:	180Ω
R 4	:	4.7kΩ
C 1	:	0.047μF / 25V
C 2	:	0.33μF / 25V
C 3	:	0.33μF / 25V
C 4	:	0.33μF / 25V
C 5	:	1μF / 16V
C 6	:	0.1μF / 25V
C 8	:	220pF / 50V
HE1	:	HW101A
HE2	:	HW101A
HE3	:	HW101A

-Connector pin location-

No.	FUNCTION
1	Vcc (5V)
2	F/R
3	FG-OUT
4	CTL-REF
5	CTL
6	I-LIMIT
7	Vco (12V)
8	GND
9	IC GND
10	N.C.

TITLE/DESCRIPTION

(E) D. C. MOTOR

(J) DCモータ (F2QTB29)

S-0121-004-31

A4
'91.8

SONY STANDARD DRAWING 0 SCALE FOR MICROFILM 50

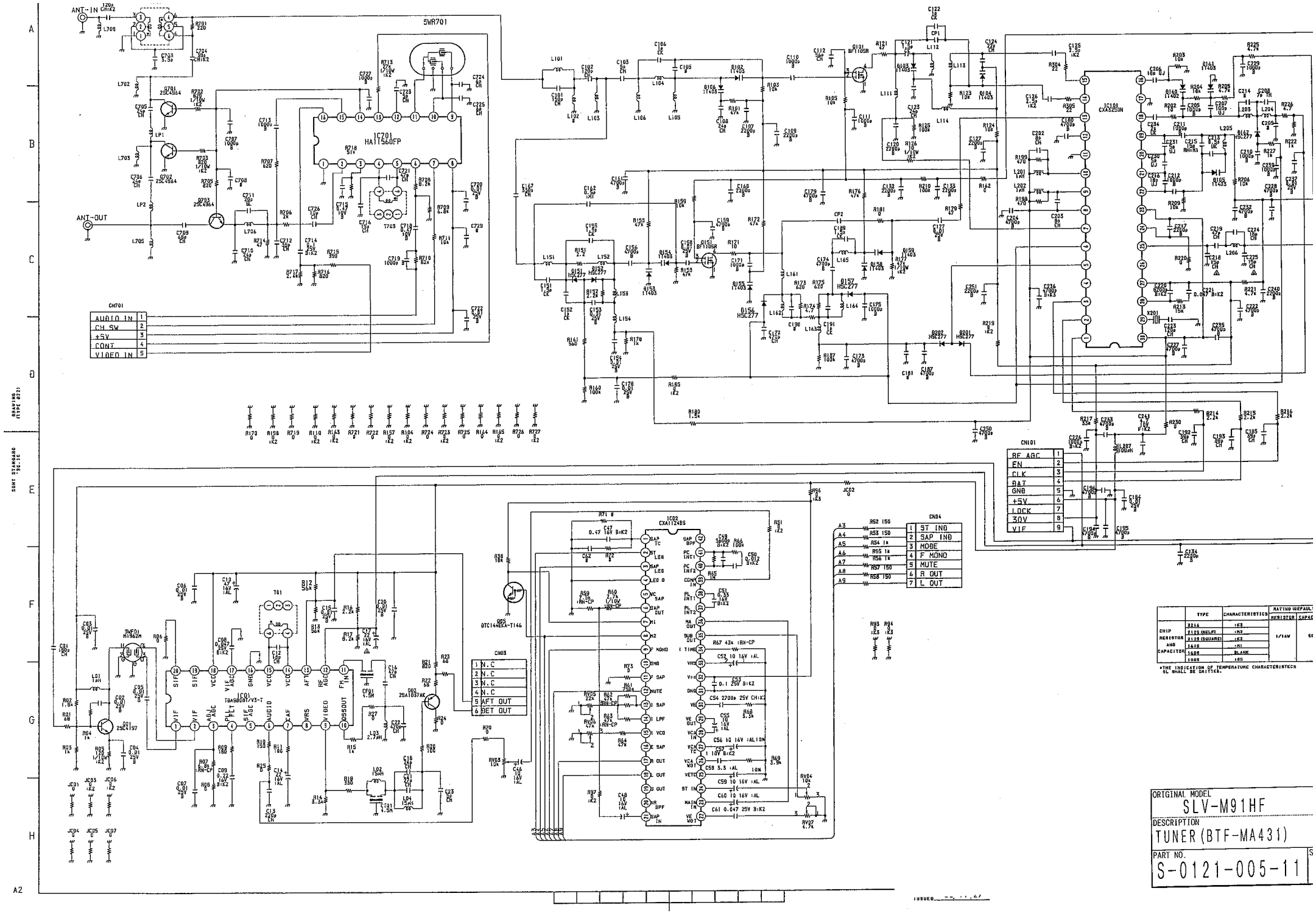

	TYPE	CHARACTERISTICS	RATING (DEFAULT) RESISTOR	CAPACITOR
CHIP RESISTOR AND CAPACITOR	3216	±5%	1/4W	50
	3125 (MELF)	±2%		
	3125 (SQUARE)	±5%		
	1608	±1%		
	1608	BLANK		
	1005	±5%		

*THE INDICATION OF TEMPERATURE CHARACTERISTICS SL SHALL BE OMITTED.

ISSUED

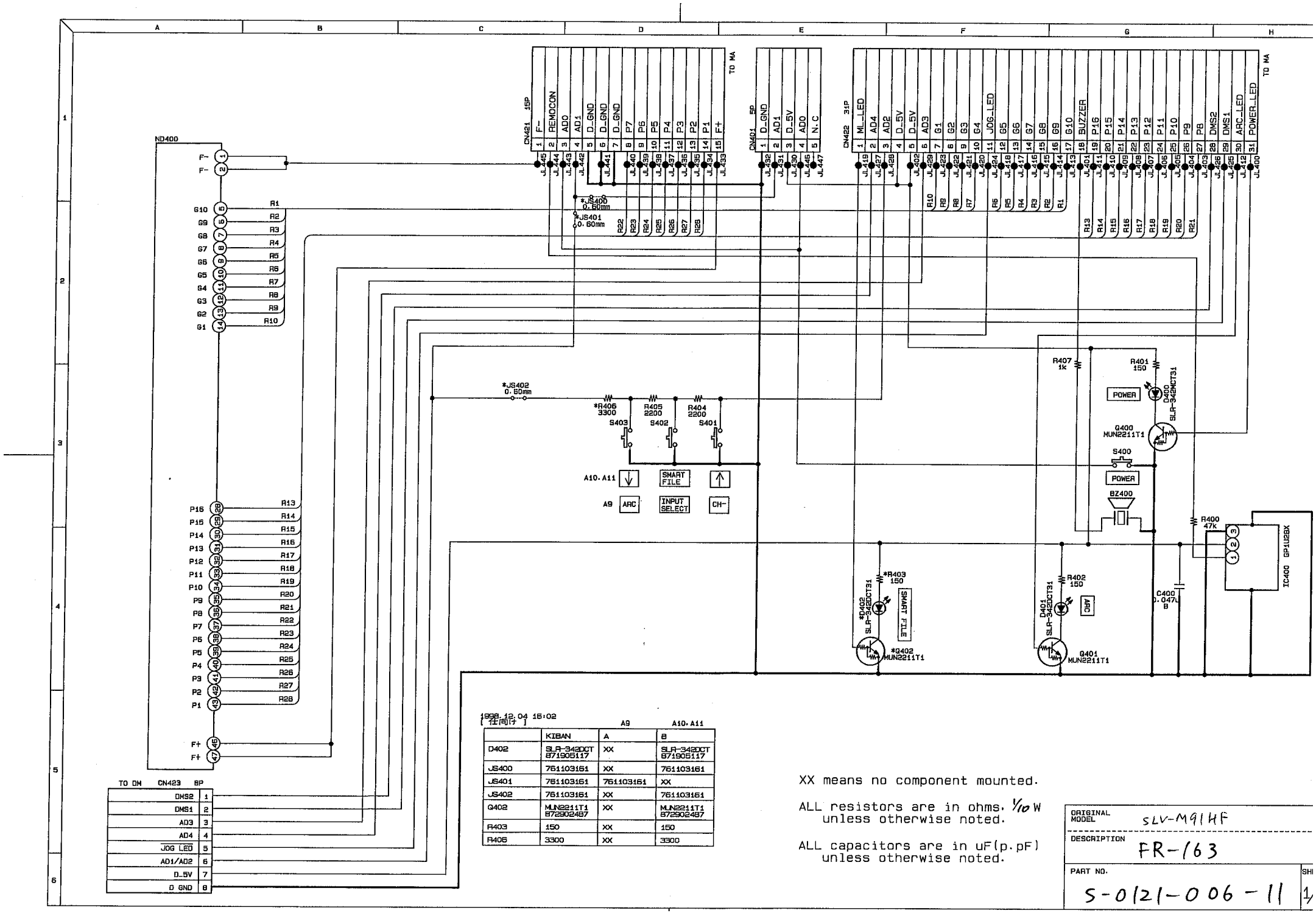

1998.12.04 16:02
[注同行]

	KIBAN	A9	A10.A11
D402	SLR-342DCT 871905117	XX	SLR-342DCT 871905117
JS400	761103161	XX	761103161
JS401	761103161	761103161	XX
JS402	761103161	XX	761103161
Q402	MUN2211T1 872902487	XX	MUN2211T1 872902487
R403	150	XX	150
R406	3300	XX	3300

XX means no component mounted.

ALL resistors are in ohms, 1/10 W unless otherwise noted.

ALL capacitors are in uF(p.pF) unless otherwise noted.

ORIGINAL MODEL SLV-M91HF

DESCRIPTION FR-163

PART NO. S-0121-006-11

SHI 1/

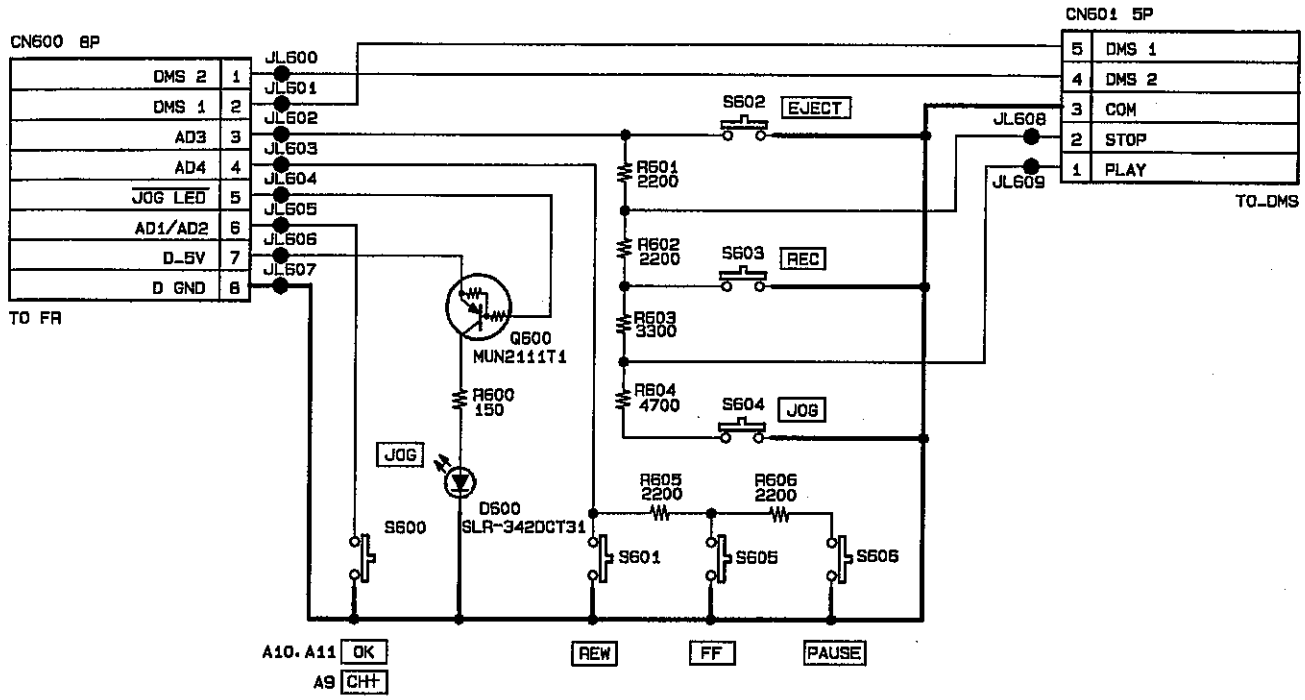

XX means no component mounted.

ALL resistors are in ohms. 1/10 W unless otherwose noted.

ALL capacitors are in uF(p:pF) unless otherwise noted.

ORIGINAL MODEL	SLV-M91HF
DESCRIPTION	DM-87
PART NO.	S-0121-007-11
SHEET	1/

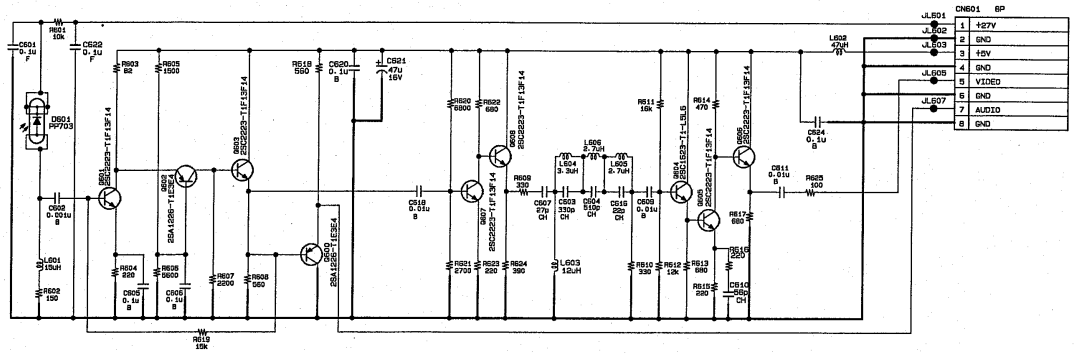

XX means no component mounted.

ALL resistors are in ohms. 1/10W unless otherwise noted.

ALL capacitors are in uF(p.pF) unless otherwise noted.

ORIGINAL MODEL	SLV-M91HF
DESCRIPTION	PD-111
PART NO.	S-0121-008-11
SHEET	1/

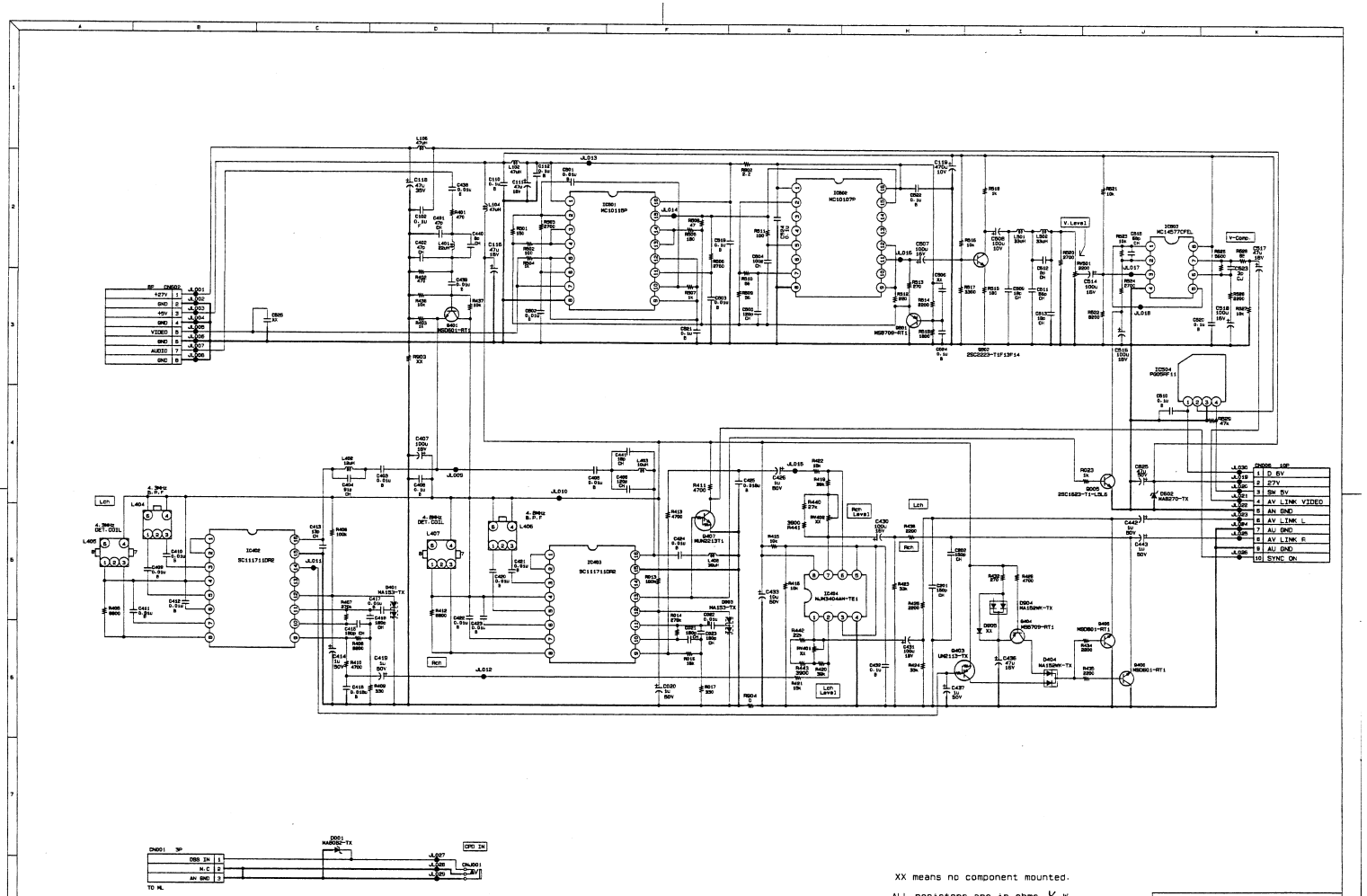

ORIGINAL MODEL	SLV-M 91HF
DESCRIPTION	LR-15
PART NO.	5-012-009-11
SHEET	1/

98/12/18 14:22 LR-15-cir/001.sht s0B1473

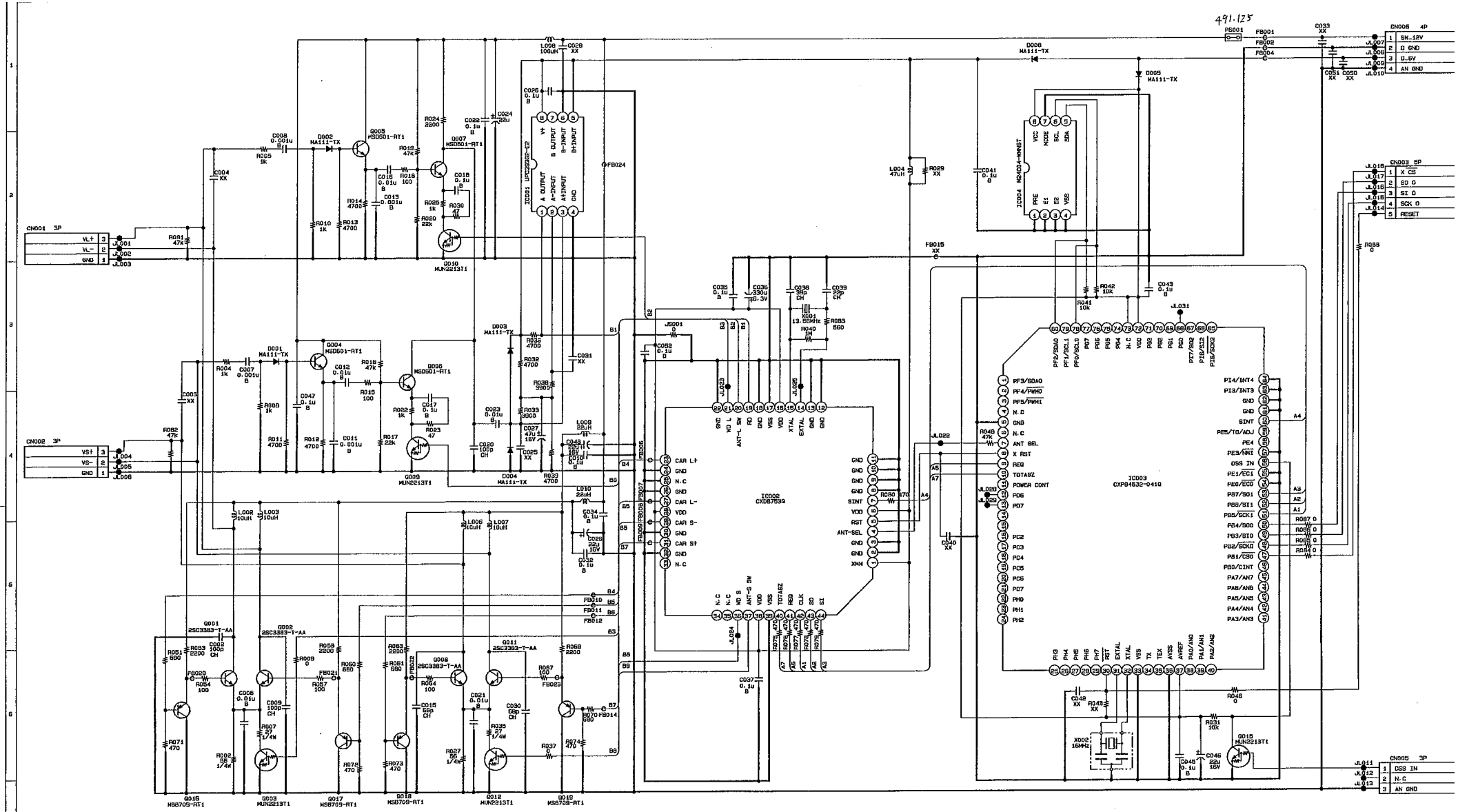

XX means no component mounted.

ALL resistors are in ohms. 1/10 W
unless otherwise noted.

ALL capacitors are in uF(p:pF)
unless otherwise noted.

ORIGINAL MODEL	SLV-M91HF
DESCRIPTION	ML-18
PART NO.	S-0121-011-11

AN-18

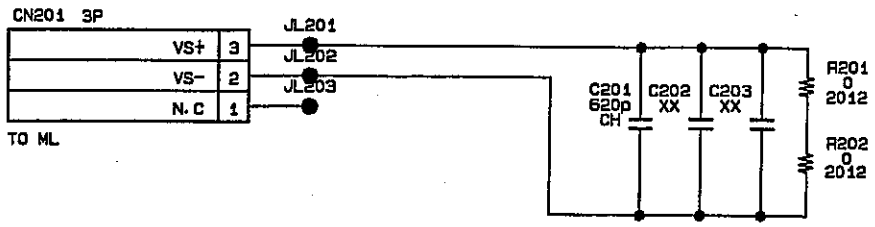

AN-19

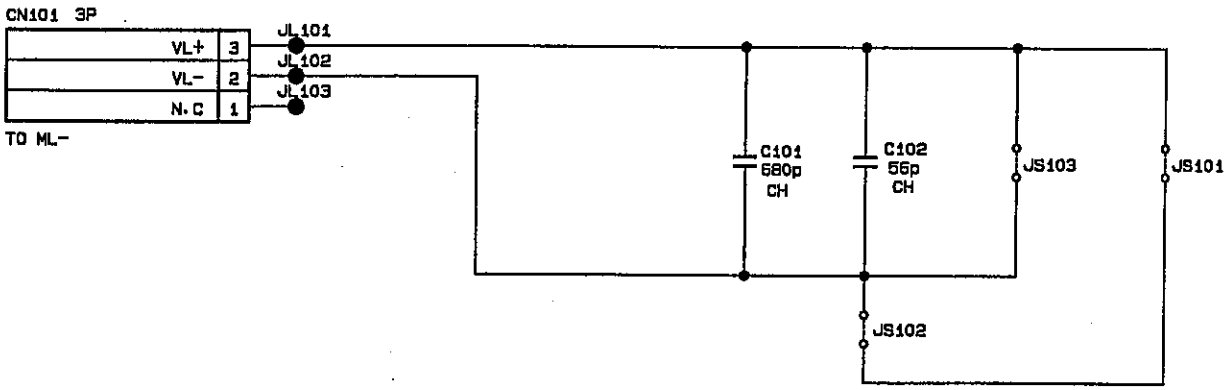

XX means no component mounted.

ALL resistors are in ohms, 1/10W unless otherwose noted.

ALL capacitors are in uF(p:pF) unless otherwise noted.

ORIGINAL MODEL	SLV-N91HF
DESCRIPTION	AN-18, AN-19
PART NO.	S-0121-012-11
SHEET	1/

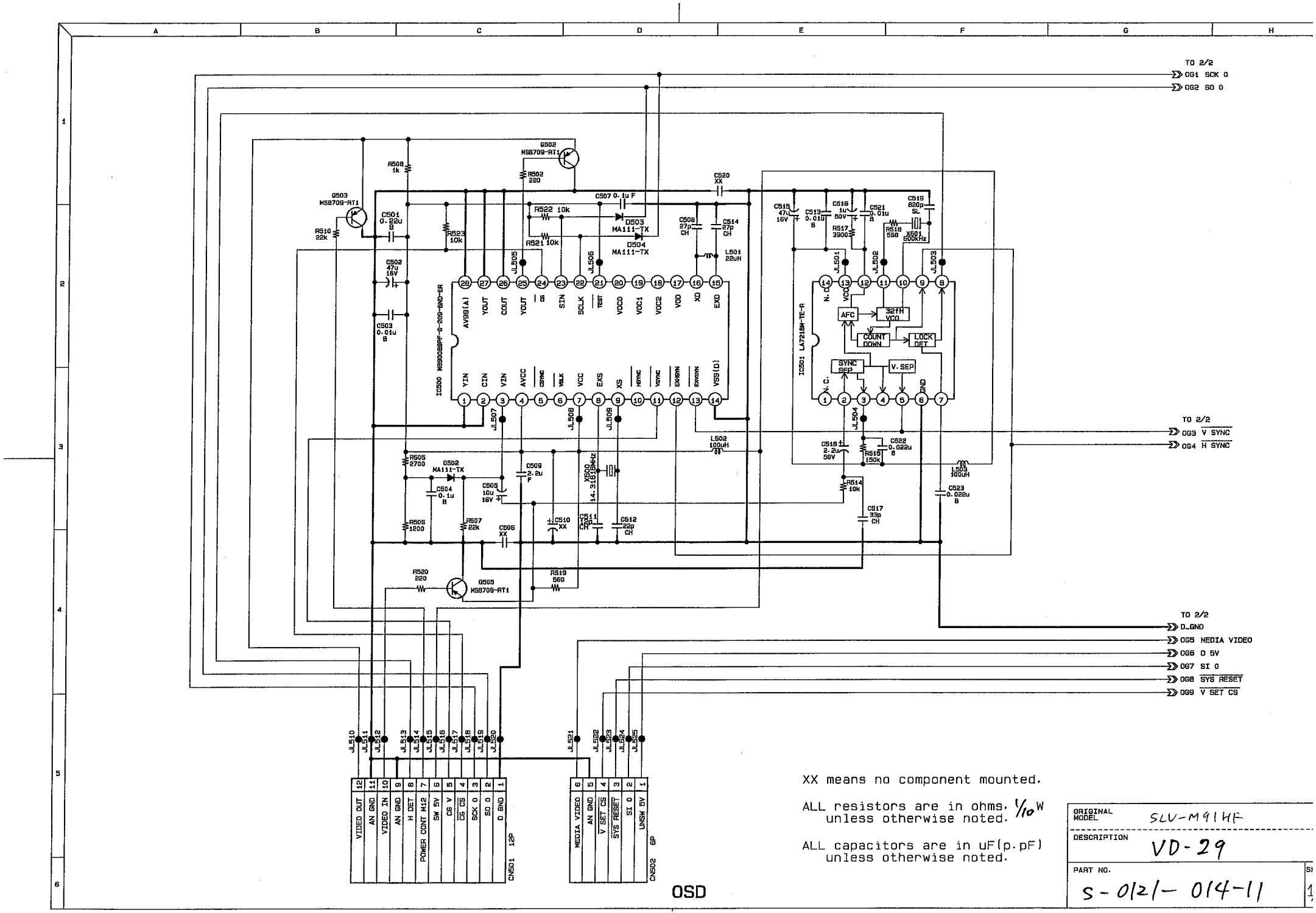

XX means no component mounted.

ALL resistors are in ohms. 1/10 W unless otherwise noted.

ALL capacitors are in uF(p.pF) unless otherwise noted.

OSD

ORIGINAL MODEL	SLV-M91HF
DESCRIPTION	VD-29
PART NO.	S-0121-014-11

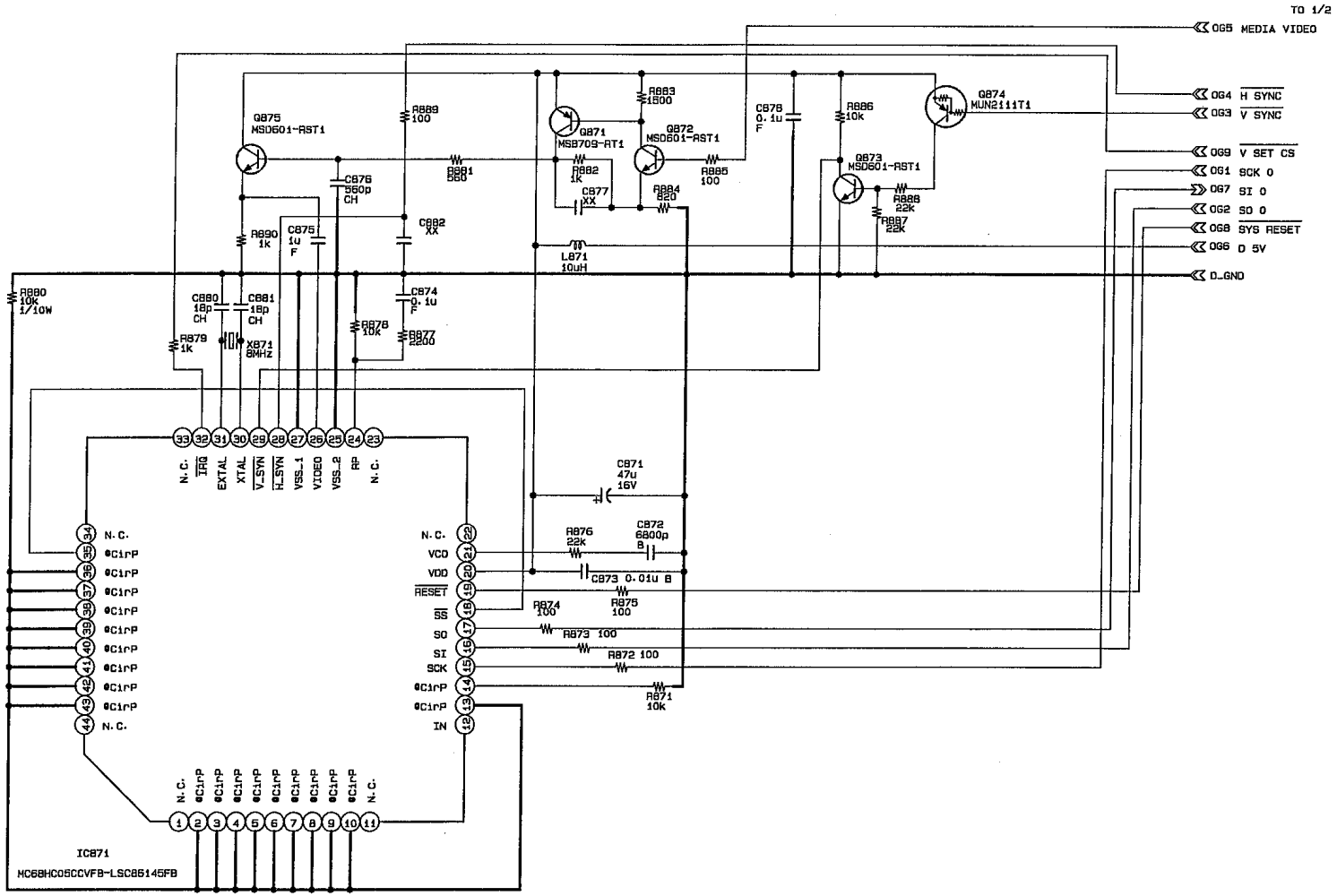

XX means no component mounted.

ALL resistors are in ohms. 1/10W unless otherwise noted.

ALL capacitors are in uF(p.pF) unless otherwise noted.

V-SET

ORIGINAL MODEL	SLV-M91HF
DESCRIPTION	VD-29
PART NO.	S-0121-014-11
SHEET	1

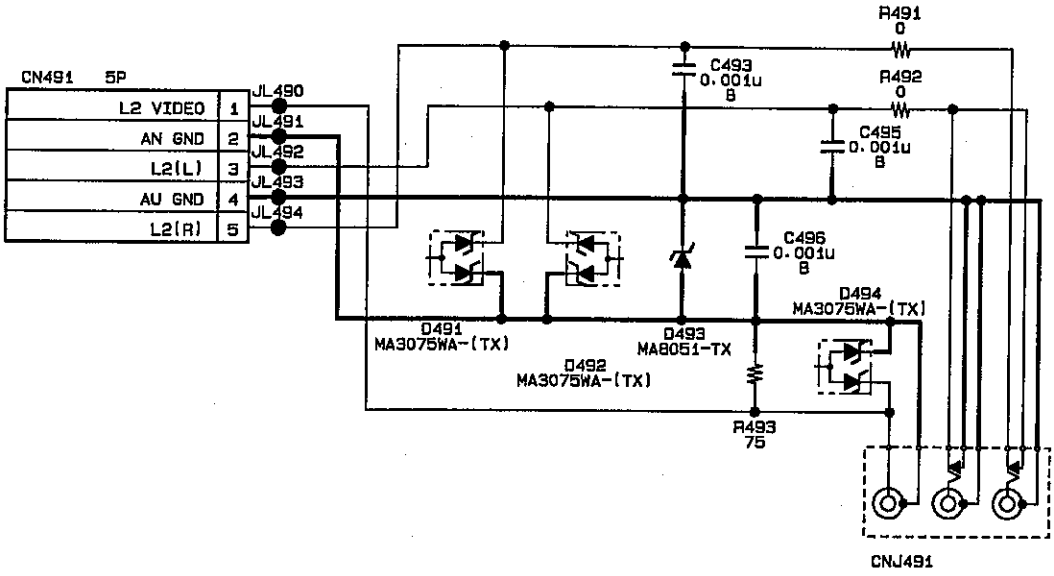

XX means no component mounted.

ALL resistors are in ohms. 1/10W
unless otherwose noted.

ALL capacitors are in uF(p:pF)
unless otherwise noted.

ORIGINAL MODEL	SLV-M91HF
DESCRIPTION	JK-172
PART NO. S-0121-015-11	SHEET 1/

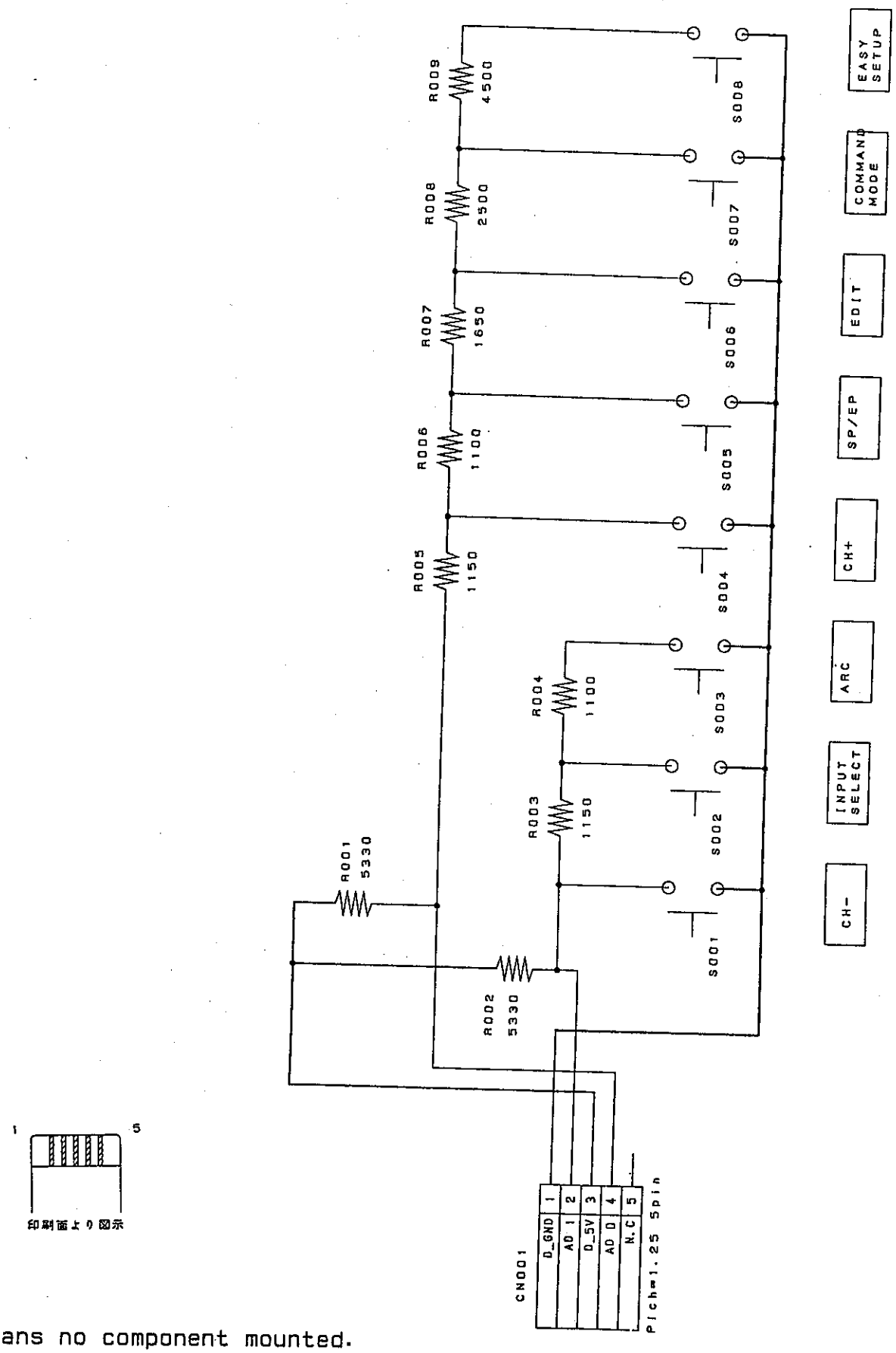

XX means no component mounted.

ALL resistors are in ohms. 1/10 W unless otherwose noted.

ALL capacitors are in uF(p:pF) unless otherwise noted.

ORIGINAL MODEL	SLV-M91HF
DESCRIPTION	Control Switch BLOCK
PART NO.	S-0121-016-11
SHEET	1/