FCC ID : AK8NTM30
Model : NTM-30

SONY

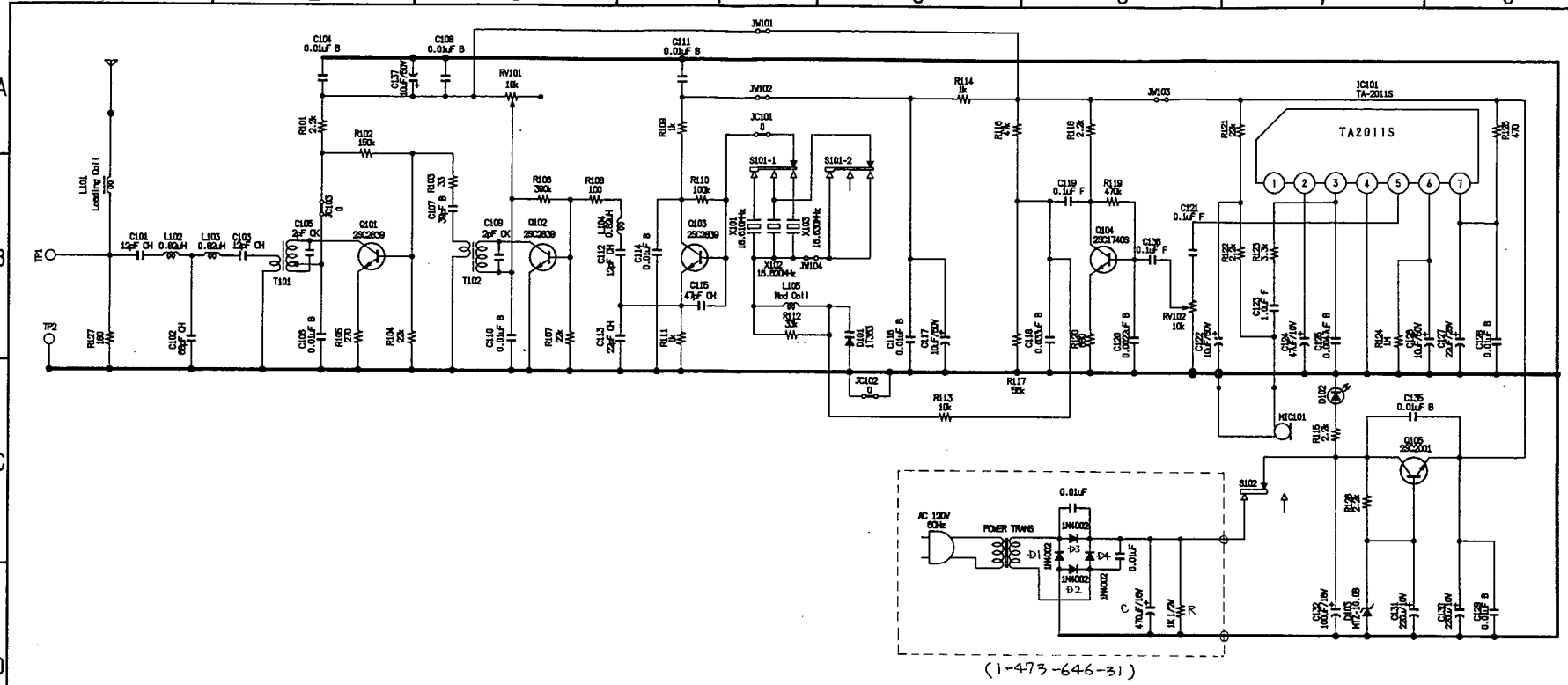

UNIT		TOLERANCE		USED ON		RANK	
ANGLE						FAMILY	
SCALE	:1					ORIGINAL MODEL	NTM-30
MATERIAL (COLOR)						FINISH (COLOR)	

DESCRIPTION (E) SCHEMATIC DIAGRAM

(J) 回路図 (TX)

PART NO.

SHEET 1/

HISTORY	SUFFIX		SCH-NO. DATE	REVISION	SIGN.
⚠X					
⚠X					
⚠X					
⚠X					
⚠X					
⚠X					

DRAWN BY	PLANNED BY	CHECKED BY	APPROVED BY	TENTATIVE	MODEL
					PART NO.

THIS DOCUMENT IS THE PROPRIETARY PROPERTY OF SONY. ITS USE IS AUTHORIZED ONLY FOR RESPONDING TO A REQUEST FOR QUOTATION. OR FOR THE PERFORMANCE WORK FOR SONY. ALL QUESTION MUST BE REFERRED TO THE LOCAL PURCHASING DEPARTMENT OF SONY.

ISSUED REVISED

A3

DRAWING (TYPE D32)

SONY STANDARD P90.10