SONY

CAD

LOCALLY PROCURED PART

COUNTRY OF ORIGIN (THAILAND)

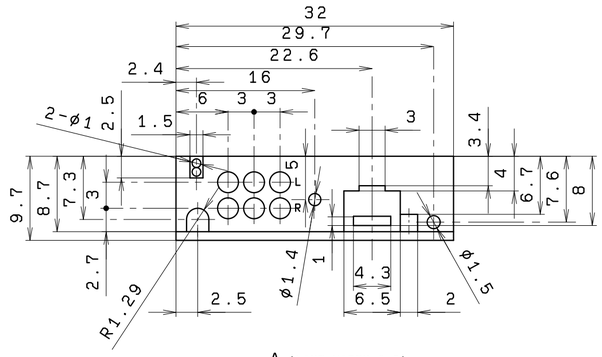

A (LINE WIDTH 0.2)

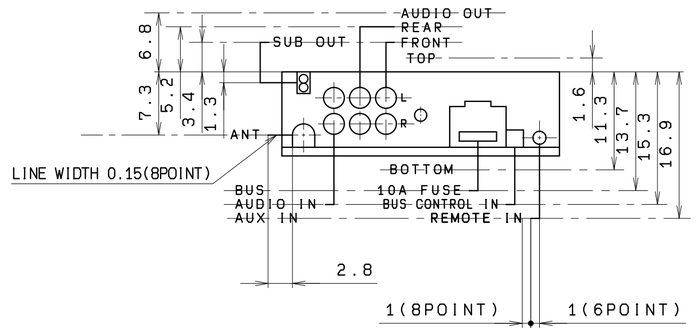

B (LINE WIDTH 0.2)

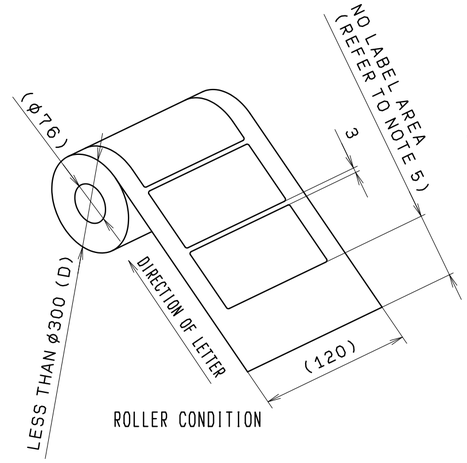

ROLLER CONDITION

WRITTEN LETTER	LETTER HEIGHT	TYPE FACE
SONY®	L=13	SONY LOGOTYPE WITH ® SYMBOL(NO 2)
MODEL NO.	1.2	NEW SONY ID TYPE HR(SILK)
SERIAL NO.		
MEX-BT5000	2	NEW SONY ID TYPE HRC(SILK)
Bluetooth~SYSTEM	2	NEW SONY ID TYPE HR (SILK)
(TM)	1.2	
FREQUENCY RANGE:	1.5	
FM...AM..		
DC:12V~GROUND		
PART NUMBER	1	
Serial Number	3	
~~		L=2
TOP, BOTTOM	1.2	NEW SONY ID TYPE HR (SILK)
AUDIO OUT FRONT, REAR		
ANT		
BUS AUDIO IN, AUX IN		
10A FUSE		
BUS CONTROL IN		
SUB OUT		
REMOTE IN		
MADE IN THAILAND		
L, R	1	
THIS DEVICE~OPERATION	1	NEW SONY ID TYPE HRC(SILK)
CERTIFICATION	3	UNIVERS MEDIUM EXTRA CONDENSED(MUSEUM)
SONY CORPORATION	2.5	
PRODUCT~MANUFACTURE	1.4	UNIVERS MEDIUM CONDENSED(MUSEUM)
STT MANUFACTURED:		
MONTH.YEAR		
7-35~Japan	1.3	
US AND FOREIGN ~ LABORATORIES.	1.5	NEW SONY ID TYPE HR(SILK)
FCC ID:AK8MEXBT5000	1.8	NEW SONY ID TYPE HR(SILK)
IC:409B-BT5000 △1		

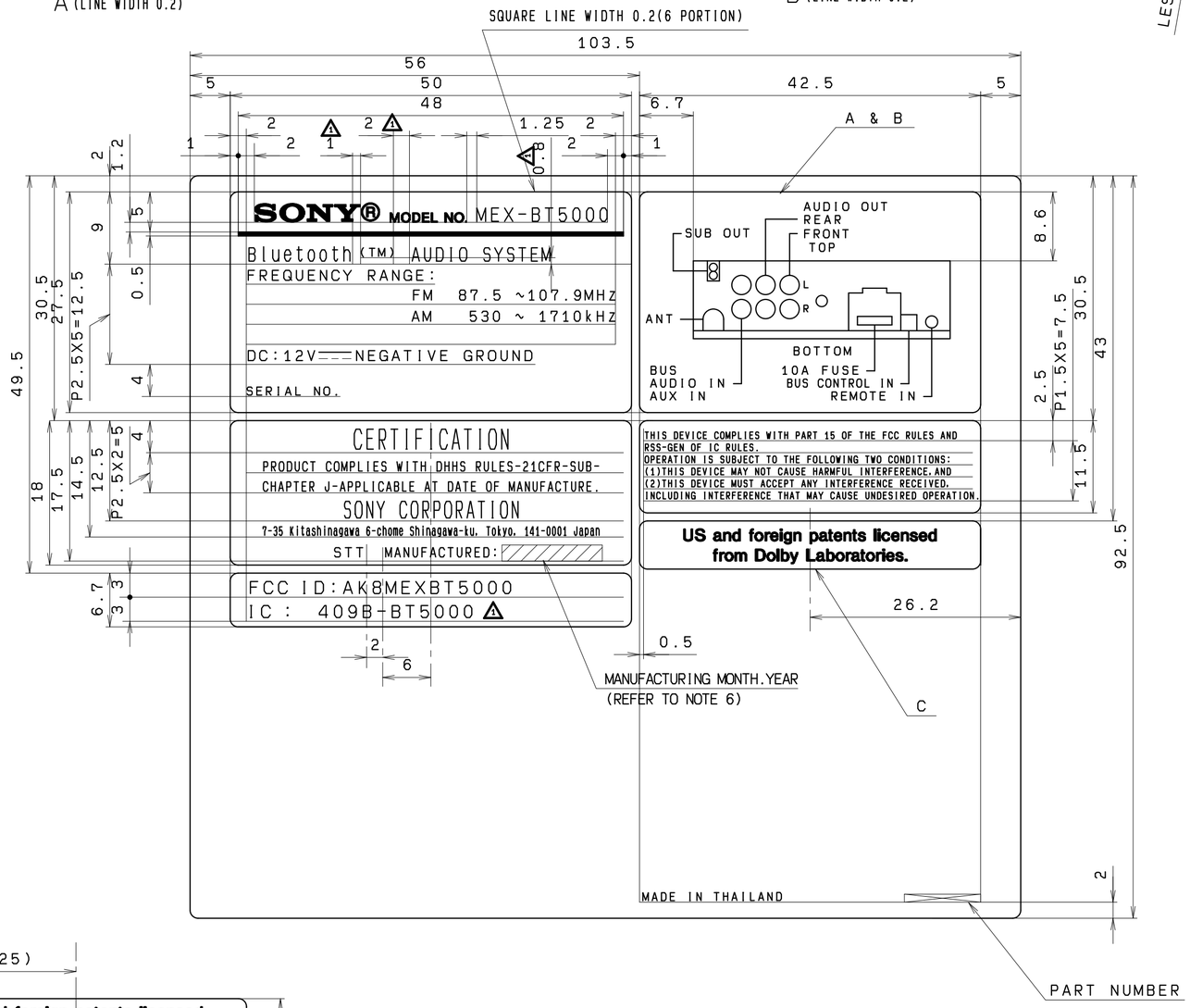

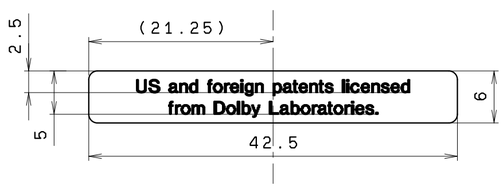

C (LINE WIDTH 0.2)

MATERIAL CONSTRUCTION TABLE

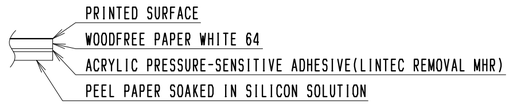

QUALITY CHARACTERISTICS : SHALL SATISFY EVERY CHARACTERISTICS SPECIFIED IN THE SECTION 6 OF LABEL, MODEL NUMBER OF SONY PARTS DESIGN STANDARD.

CAUTION IN USE : PAY SPECIAL ATTENTION TO AFFIXING CONDITION SINCE CHEMICALS-PROOF CHARACTERISTICS TEST IS MADE WITH THE LABEL AFFIXED.(SECTION 7-4 OF SONY PARTS DESIGN STANDARD)

NOTE 1) THE ADDED Serial No. IS TO BE DETERMINED UNDER INSTRUCTIONS FROM THE MATERIAL SECTION OF ORDERING FACTORY.

2) POSITION OF SERIAL NO.(REFER TO RIGHT) TOLERANCE OF SIZE MUST BE ±0.5.

3) DELIVERY SHALL BE IN ROLLED CONDITION.

4) UNLESS OTHERWISE SPECIFIED, ROUNDING SHALL BE R1.

5) NO LABEL AREA MUST BE LONG ENOUGH TO COVER OUTSIDE SURFACE OF THE ROLLER (ID).

6) REFER TO (C-4010-057-) FOR THE PRINT OF EACH SIGN OF THE MANUFACTURING PLACE.

2±1

SERIAL NO. (Serial Number)

この部品には SS-00259-1 に指定する物質を含んだ材料は、使用してはならない。
This part should not contain any substances which are specified in SS-00259-1.

成形用樹脂・インキ・塗料・被覆電線はグリーンパートナー認定取引先から調達すること。
Purchase ink, paint, wire rods, and molding resins only from the business partners that Sony approves as Green Partners.

HISTORY X COUNT	SUFFIX REPL.	ECN-NO. DATE	REVISION	SIGN.
△6 x				
△5 x				
△4 x				
△3 x				
△2 x				
△1 x 7	-2	'06.05.15	CHANGE IC NUMBER CHANGE (TM) SIZE	S.K

UNIT	mm
TOLERANCE	STS-3
ANGLE	
SCALE	2:1
USED ON	
RANK	
FAMILY	
ORIGINAL MODEL	MEX-BT5000//Q(U)
MATERIAL(COLOR)	ABOVE
FINISH(COLOR)	BASE;WHITE LETTER;BLACK
DESCRIPTION	(E) LABEL, MODEL NUMBER(U) (J) 機銘板(U)
PART NO.	~~2-696-096-01~~
SHEET	1/1

DRAWN BY	PLANNED BY	CHECKED BY	APPROVED BY	MODEL
AUG eVD '06.04.27 S.KURAUCHI	AUG eVD '06.04.27 S.KURAUCHI	AUG eVD '06.05.15 MUROGA	AUG eVD '06.05.15 MUROGA	SJ-C229
				PART NO. △1 0-329-750-02

TENTATIVE

VIEWER

THIS DOCUMENT IS THE PROPRIETARY PROPERTY OF SONY. ITS USE IS AUTHORIZED ONLY FOR RESPONDING TO A REQUEST FOR QUOTATION, OR FOR THE PERFORMANCE OF WORK FOR SONY. ALL QUESTIONS MUST BE REFERRED TO THE LOCAL PURCHASING DEPARTMENT OF SONY.

ISSUED '06.04.27

DRAC PDF 0-329-750- 05/15/06 15:41 DRACO

DRAWING (TYPE D22)

SONY STANDARD 90.10

A2