CONFIDENTIAL

SONY

CAD

LOCALLY PROCURED PART

COUNTRY OF ORIGIN (THAILAND)

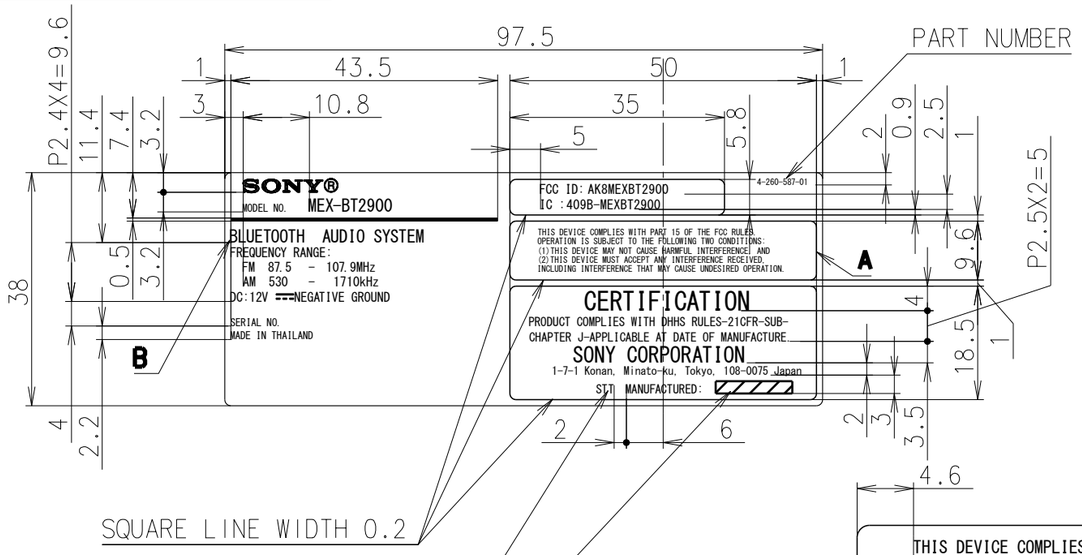

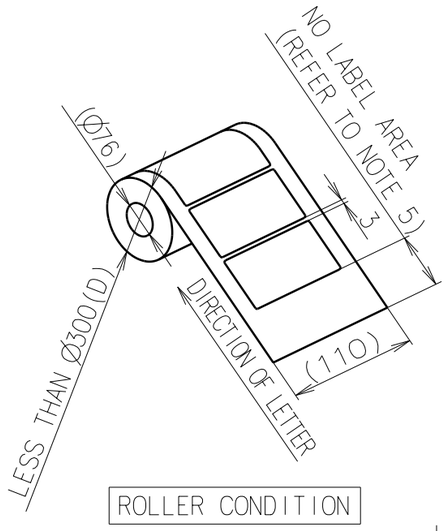

ROLLER CONDITION

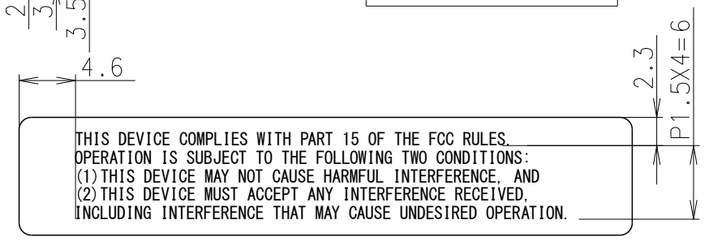

A(2:1)

WRITTEN LETTERS	LETTER HEIGHT	TYPE FACE
SONY®	L=13	SONY LOGOTYPE WITH®SYMBOL(NO.2)
MODEL NO.	1.2	NEW SONY ID TYPE HR
MEX-BT2900	2	
BLUETOOTH~SYSTEM		
R	0.8	
FREQUENCY RANGE:	1.5	
FM. . . , AM. . .		
DC:12V~GROUND		
⎓	a=2	REFER TO CLEAN PROOF
SERIAL NO.	1.2	NEW SONY ID TYPE HR
MADE IN THAILAND		
4-260-587-01	1	
FCC ID: XXXXXXXXXXXX	1.5	NEW SONY ID TYPE HRC
IC :XXXXXXXXX		
THIS DEVICE~OPERATION.	1	
CERTIFICATION	3	
PRODUCT~MANUFACTURE.	1.4	
SONY CORPORATION	2.5	
1-7-1~Japan	1.3	
STT MANUFACTURED:	1.4	
MONTH, YEAR		
Serial Number	3	

MANUFACTURING PLACE SIGN

MANUFACTURING MONTH, YEAR

INDICATION METHOD OF MANUFACTURING DATE

MANUFACTURED:NAME OF MONTH,YEAR(4DIGIT)

EXAMPLE

STT MANUFACTURED:June,2010

※REFER TO (C-4010-057-2) FOR DETAIL OF THE PRINT.

NAME OF MONTH(NO ABBREVIATION)	
January	July
February	August
March	September
April	October
May	November
June	December

NOTE 1) THE ADDED Serial Number IS TO BE DETERMINED UNDER INSTRUCTIONS FROM THE MATERIAL SECTION OF ORDERING FACTORY.

2) POSITION OF Serial Number(REFER TO RIGHT) TOLERANCE OF SIZE MUST BE±0.5.

3) DELIVERY SHALL BE IN ROLLED CONDITION.

4) UNLESS OTHERWISE SPECIFIED,ROUNDING SHALL BE R1.

5) NO LABEL AREA MUST BE LONG ENOUGH TO COVER OUTSIDE SURFACE OF THE ROLLER(πD).

6) BLOCK COPY PROVIDED FROM SONY SHOULD BE USED.

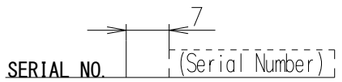

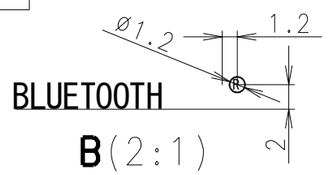

B(2:1)

MATERIAL CONSTRUCTION TABLE

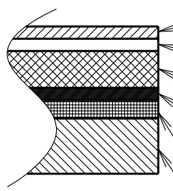

POLYESTER FILM MATT FINISH t0.025 LAMINATE (REFER TO TABLE 1)

PRINTED SURFACE

POLYESTER-BASE UV COATING POLYESTER FILM t0.05 } (REFER TO TABLE1)

ALUMINUM DEPOSITION

ACRYLIC-BASE PRESSURE-SENSITIVE ADHESIVE (LINTEC CORP. A-300 OR EQUIVALENT)

SILICONE-IMPREGNATED RELEASE PAPER

QUALITY CHARACTERISTICS:ALL CHARACTERISTICS SPECIFIED IN CLAUSE 7 OF STM-1077 "SPECIFICATION LABELS-PARTS DESIGN STANDARDS" MUST BE SATISFIED.

TABLE 1 : MATERIALS SPECIFICATION

ITEM	POLYESTER FILM		POLYESTER-BASE + ALUMINUM DEPOSITION	
	PRODUCT NAME	MAKER	PRODUCT NAME	MAKER
1	OVER LAMINATE LABEL	THAI KK	TLSM50	TAIWAN KK
2	PETN25 NPL 6LK	LINTEC	TLSMB50	THAI KK
CHOOSE ONE MATERIAL ITEM IN THE SAME ROW FROM THIS TABLE TO MAKE PART				

FOR SONY USE ONLY

LABEL TYPE

BT-U-1-002

この部品には SS-00259-1 に指定する物質を含んだ材料は，使用してはならない。
This part should not contain any substances which are specified in SS-00259-1.

成形用樹脂・インキ・塗料・被覆電線はグリーンパートナー認定取引先から調達すること。
Purchase ink,paint,wire rods,and molding resins only from the business partners that Sony approves as Green Partners.

HISTORY X COUNT	SUFFIX REPL.	ECN-NO. DATE	REVISION	SIGN.
6 x				
5 x				
4 x				
3 x				
2 x				
1 x				

UNIT mm

ANGLE

SCALE 1 : 1

TOLERANCE	STS-3
L≦ 4	±0.2
4 <L≦ 16	±0.3
16 <L≦ 63	±0.4
63 <L≦ 250	±0.5
250 <L≦ 400	±0.7
400 <L≦ 1000	±1.5
1000 <L≦ 2000	±3
2000 <L≦ 4000	±4

USED ON

RANK

FAMILY

ORIGINAL MODEL MEX-BT2900//Q(UC)

MATERIAL(COLOR): PETP+Al+PSA (REFER TO ABOVE)

FINISH(COLOR): BASE:SILVER LETTER:BLACK

TITLE/DESCRIPTION

(E) LABEL,MODEL NUMBER(UC)

(J) LABEL,MODEL NUMBER(UC)

DRAWN BY	PLANNED BY	CHECKED BY	APPROVED BY
STT-C '10.06.14 ANU	STT-C '10.06.14 NOPPAVIT	STT-C '10.06.15 K.INOUE	PI&S-PE '10.06.21 TANABE

TENTATIVE

MODEL SJ-C936

PART NO. 0-474-421-01

PART NO. ~~4-260-587-01~~

SHEET 1/1

THIS DOCUMENT IS THE PROPRIETARY PROPERTY OF SONY. ITS USE IS AUTHORIZED ONLY FOR RESPONDING TO A REQUEST FOR QUOTATION,OR FOR THE PERFORMANCE OF WORK FOR SONY. ALL QUESTIONS MUST BE REFERRED TO THE LOCAL PURCHASING DEPARTMENT OF SONY. THE REPRODUCTION, DISTRIBUTION AND UTILIZATION OF THIS DOCUMENT AS WELL AS THE COMMUNICATION OF ITS CONTENTS TO OTHERS WITHOUT EXPRESS AUTHORIZATION IS PROHIBITED. OFFENDERS WILL BE HELD LIABLE FOR THE PAYMENT OF DAMAGES. ALL RIGHTS RESERVED IN THE EVENT OF THE GRANT OF A PATENT, UTILITY MODEL OR DESIGN.COPYRIGHT RESERVED.

ISSUED '10.06.14

F spec - D32

DRAWING

SONY STANDARD

A3 '09.4

CATIA