CONFIDENTIAL

SONY

CAD

LOCALLY PROCURED PART

COUNTRY OF ORIGIN (THAILAND)

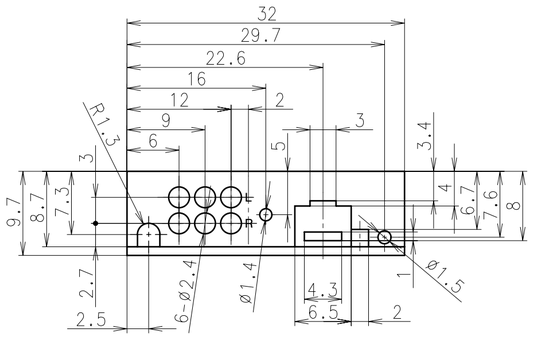

A (LINE WIDTH 0.2)

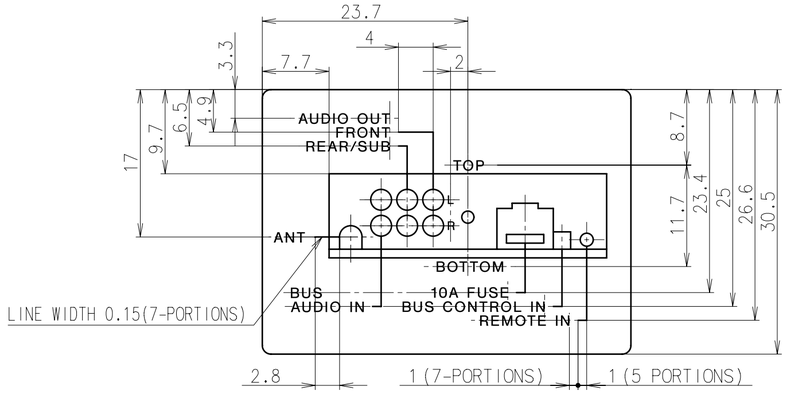

B (LINE WIDTH 0.2)

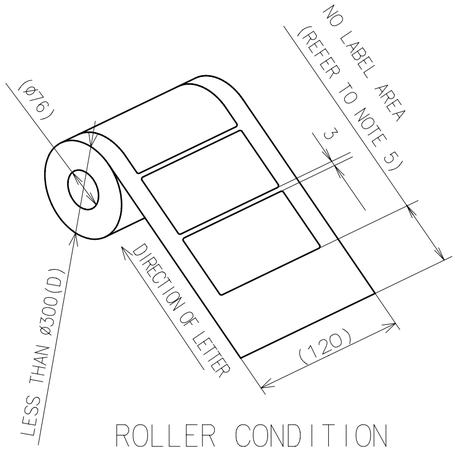

ROLLER CONDITION

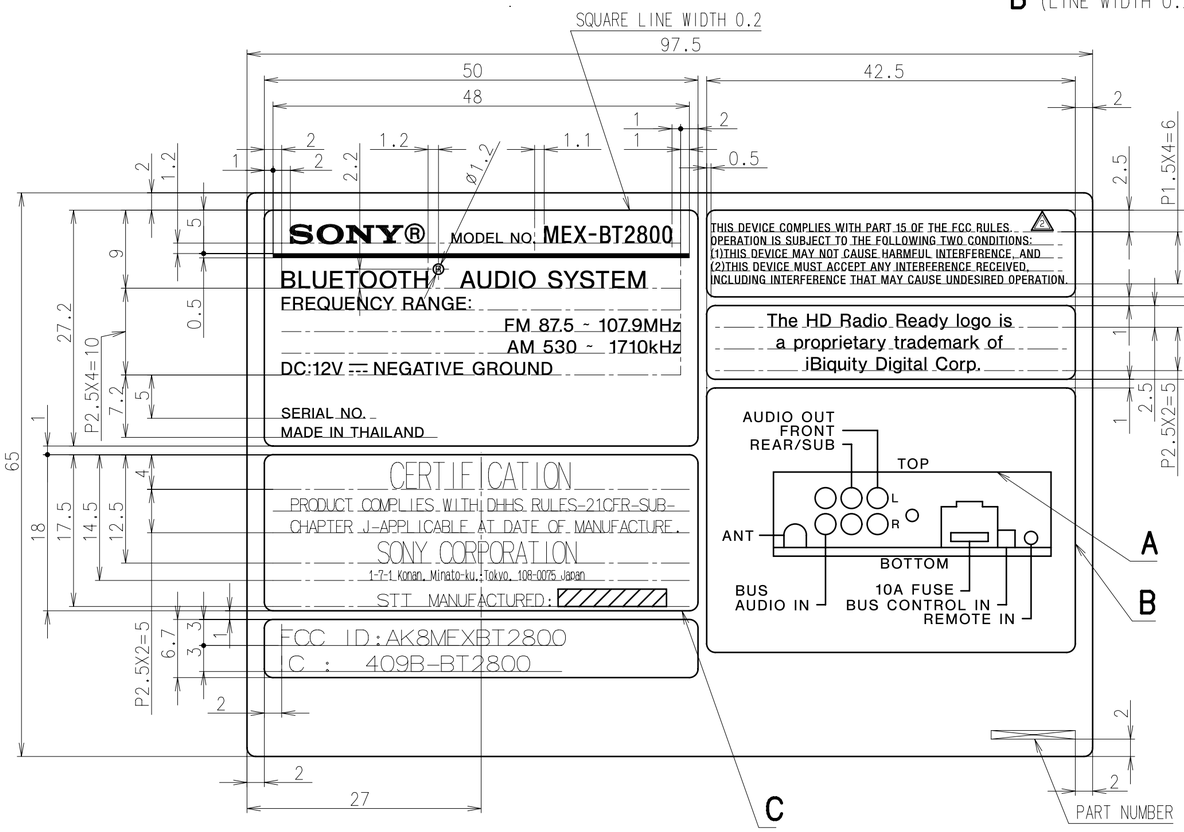

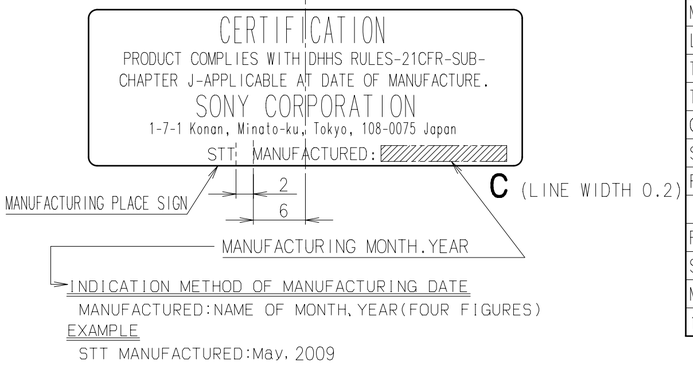

C (LINE WIDTH 0.2)

INDICATION METHOD OF MANUFACTURING DATE

MANUFACTURED:NAME OF MONTH,YEAR(FOUR FIGURES)

EXAMPLE

STT MANUFACTURED:May, 2009

NAME OF MONTH(NO ABBREVIATION)

January	July
February	August
March	September
April	October
May	November
June	December

※REFER TO (C-4010-057-2) FOR DETAIL OF THE PRINT.

NOTE 1) THE ADDED Serial No. IS TO BE DETERMINED UNDER INSTRUCTIONS FROM THE MATERIAL SECTION OF ORDERING FACTORY.
2) POSITION OF SERIAL NO. (REFER TO RIGHT) TOLERANCE OF SIZE MUST BE ±0.5
3) DELIVERY SHALL BE IN ROLLED CONDITION.
4) UNLESS OTHERWISE SPECIFIED, ROUNDING SHALL BE R1.
5) NO LABEL AREA MUST BE LONG ENOUGH TO COVER OUTSIDE SURFACE OF THE ROLLER(πD).

SERIAL NO. [Serial Number] 7

WRITTEN LETTERS	LETTER HEIGHT	TYPE FACE
SONY®	L=13	SONY LOGOTYPE WITH ® SYMBOL (NO.2)
MODEL NO.	1.2	NEW SONY ID TYPE HR
SERIAL NO.		
MEX-BT2800	2	NEW SONY ID TYPE HRC
BLUETOOTH~SYSTEM		NEW SONY ID TYPE HR
R	0.8	
FREQUENCY RANGE:	1.5	
FM..,AM..		
DC:12V~GROUND		
PART NUMBER	1	
Serial Number	3	
---		L=2
TOP, BOTTOM	1.2	NEW SONY ID TYPE HR
AUDIO OUT,FRONT,REAR/SUB		
ANT		
BUS AUDIO IN		
10A FUSE		
BUS CONTROL IN		
REMOTE IN		
MADE IN THAILAND		
L, R	1	
The HD~Digital Corp.	1.5	
THIS DEVICE~OPERATION	1	NEW SONY ID TYPE HRC
CERTIFICATION	3	UNIVERS MEDIUM EXTRA CONDENSED (MUSEUM)
SONY CORPORATION	2.5	
FCC ID :AK8MEXBT2800	1.8	NEW SONY ID TYPE HR
IC : 409B-BT2800		
PRODUCT~MANUFACTURE	1.4	UNIVERS MEDIUM CONDENSED (MUSEUM)
STT MANUFACTURED:		
MONTH, YEAR		
1-7-1~Japan	1.3	

MATERIAL CONSTRUCTION TABLE

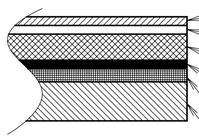

POLYESTER FILM MATT FINISH t0.025 LAMINATE (REFER TO TABLE 1)
PRINTED SURFACE
POLYESTER-BASE UV COATING POLYESTER FILM t0.05
ALUMINUM DEPOSITION
} (REFER TO TABLE1)
ACRYLIC-BASE PRESSURE-SENSITIVE ADHESIVE (LINTEC CORP. A-300 OR EQUIVALENT)
SILICONE-IMPREGNATED RELEASE PAPER

QUALITY CHARACTERISTICS:ALL CHARACTERISTICS SPECIFIED IN CLAUSE 7 OF SS-00077 "SPECIFICATION LABELS-PARTS DESIGN STANDARDS" MUST BE SATISFIED.

TABLE 1 : MATERIALS SPECIFICATION

ITEM	POLYESTER FILM		POLYESTER-BASE + ALUMINUM DEPOSITION	
	PRODUCT NAME	MAKER	PRODUCT NAME	MAKER
1	OVER LAMINATE LABEL	THAI KK	TLSM50	TAIWAN KK
2	PETN25 NPL 6LK	LINTEC	TLSMB50	THAI KK
CHOOSE ONE MATERIAL ITEM IN THE SAME ROW FROM THIS TABLE FOR MAKE PART				

この部品には SS-00259-1 に指定する物質を含んだ材料は，使用してはならない。
This part should not contain any substances which are specified in SS-00259-1.

成形用樹脂・インキ・塗料・被覆電線はグリーンパートナー認定取引先から調達すること。
Purchase ink,paint,wire rods,and molding resins only from the business partners that Sony approves as Green Partners.

HISTORY K. COUNT	SUFFIX REPL.	ECN-NO. DATE	REVISION	SIGN.
6x		– ''		
5x		– ''		
4x		– ''		
3x		– ''		
2x 1	NO CHANGE	EC-D58170 '09.10.01	REVISE PRODUCT SAFETY COMPLIANCE	TANUPONG
1x		– '09.08.21	P/N RELEASE	

DRAWN BY	PLANNED BY	CHECKED BY	APPROVED BY
STT '09.06.18 TANUPONG	STT '09.06.18 SIRIWAN	P I&S PE3 10/29/2009 K.UCHIDA	CPDG PI&S PE3 10/29/2009 T.TANABE

TENTATIVE

MODEL SJ-C828

PART NO. 0-312-116-01

UNIT mm

ANGLE

SCALE 2:1

TOLERANCE STS-3	
L≦ 4	±0.2
4<L≦ 16	±0.3
16<L≦ 63	±0.4
63<L≦250	±0.5
250<L	±0.7

USED ON

RANK

FAMILY

ORIGINAL MODEL MEX-BT2800//Q(U)

MATERIAL(COLOR) PETP+AL+PSA (REFER TO ABOVE)

FINISH(COLOR) BASE:SILVER LETTER:BLACK

TITLE/DESCRIPTION

(E) LABEL, MODEL NUMBER(U)

(J) LABEL, MODEL NUMBER(U)

PART NO. 4-157-843-01

SHEET 1/1

THIS DOCUMENT IS THE PROPRIETARY PROPERTY OF SONY. ITS USE IS AUTHORIZED ONLY FOR RESPONDING TO A REQUEST FOR QUOTATION,OR FOR THE PERFORMANCE OF WORK FOR SONY. ALL QUESTIONS MUST BE REFERRED TO THE LOCAL PURCHASING DEPARTMENT OF SONY. THE REPRODUCTION, DISTRIBUTION AND UTILIZATION OF THIS DOCUMENT AS WELL AS THE COMMUNICATION OF ITS CONTENTS TO OTHERS WITHOUT EXPRESS AUTHORIZATION IS PROHIBITED. OFFENDERS WILL BE HELD LIABLE FOR THE PAYMENT OF DAMAGES. ALL RIGHTS RESERVED IN THE EVENT OF THE GRANT OF A PATENT, UTILITY MODEL OR DESIGN.COPYRIGHT RESERVED.

ISSUED '09.06.16

F spec - D22

CATIA

DRAWING

SONY STANDARD

A2 '09.4