SONY

LOCALLY PROCURED PART

COUNTRY OF ORIGIN (THAILAND)

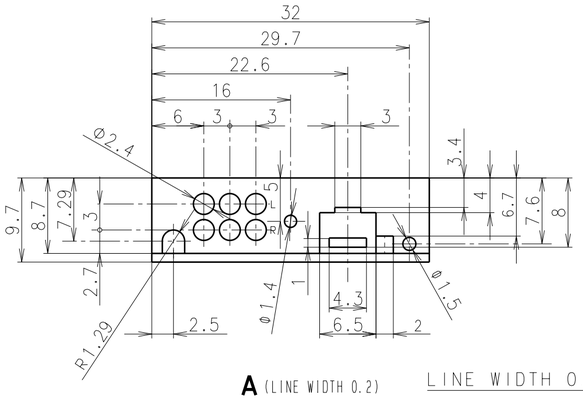

A (LINE WIDTH 0.2)

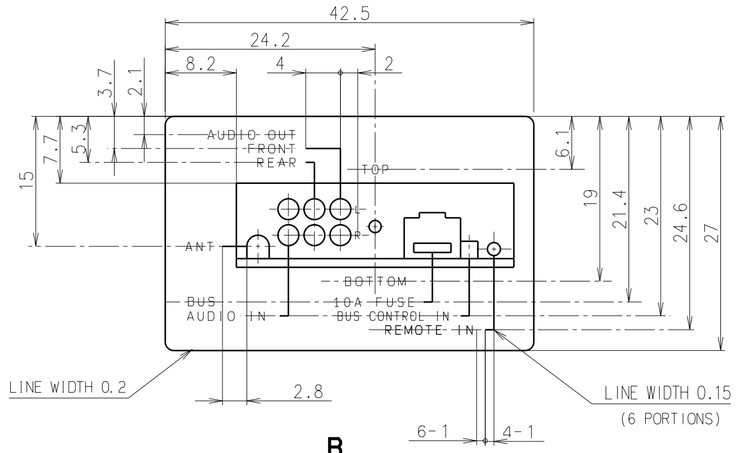

B

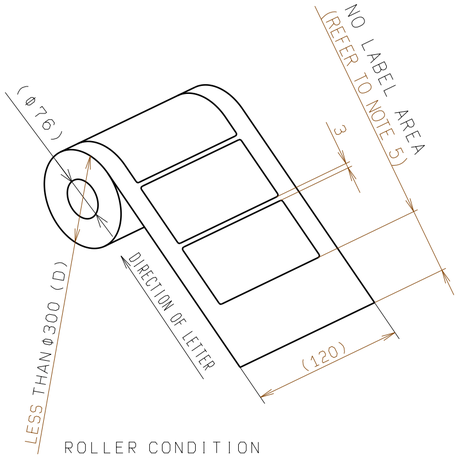

ROLLER CONDITION

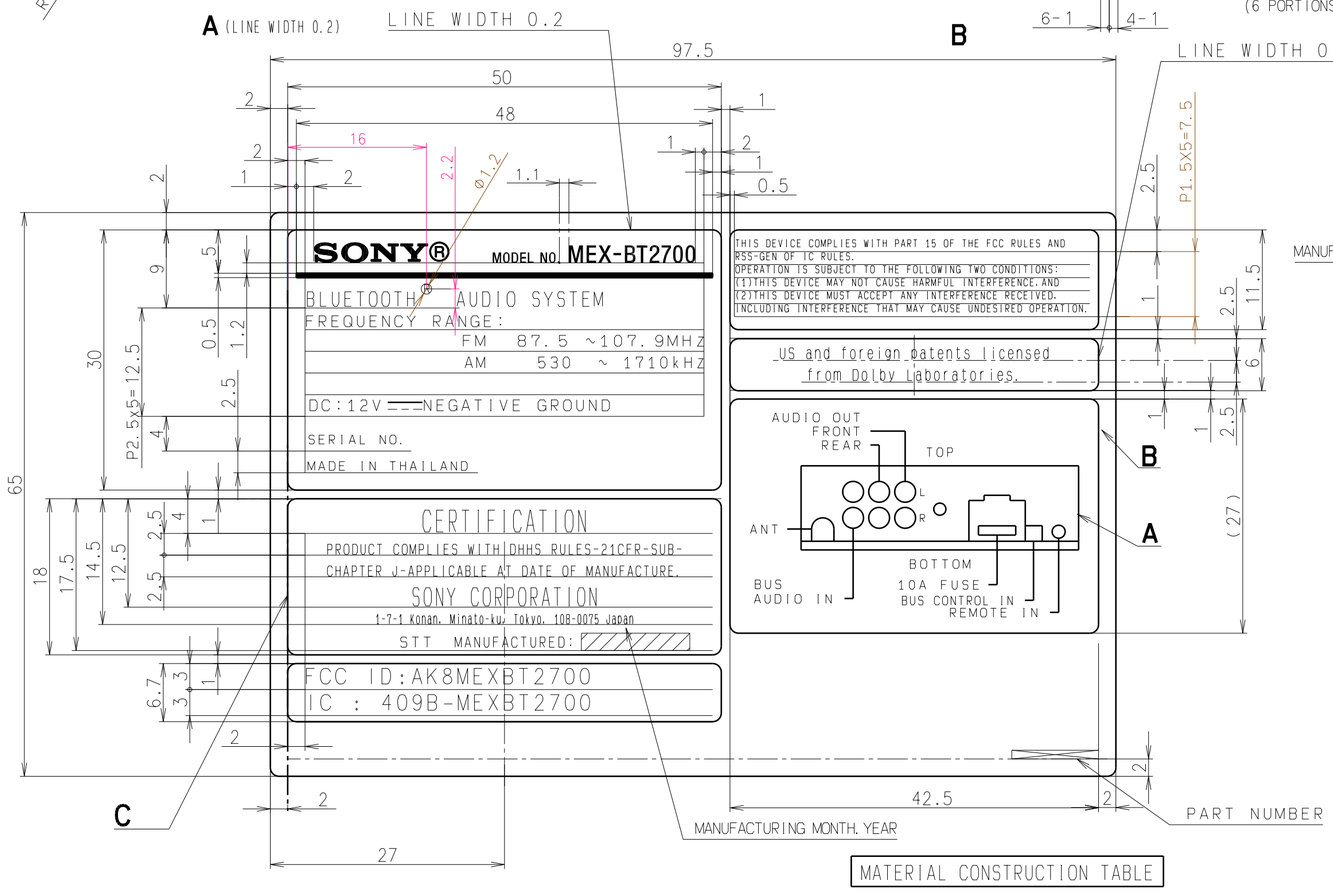

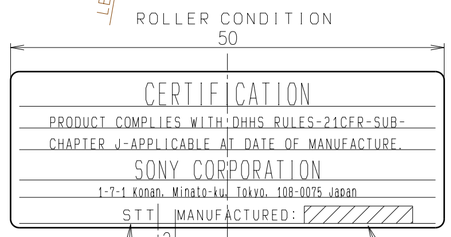

MANUFACTURING PLACE SIGN

C (LINE WIDTH 0.2)

MANUFACTURING MONTH. YEAR

INDICATION METHOD OF MANUFACTURING DATE

MANUFACTURED:NAME OF MONTH, YEAR(FOUR FIGURES)

EXAMPLE

STT MANUFACTURED:May, 2007

NAME OF MONTH(NO ABBREVIATION)

January	July
February	August
March	September
April	October
May	November
June	December

※REFER TO (C-4010-057-2) FOR DETAIL OF THE PRINT.

WRITTEN LETTER	LETTER HEIGHT	TYPE FACE
SONY®	L=13	SONY LOGOTYPE WITH ® SYMBOL(NO 2)
MODEL NO.	1.2	NEW SONY ID TYPE HR
SERIAL NO.		
MEX-BT2700	2	NEW SONY ID TYPE HRC
BLUETOOTH~SYSTEM		
®	0.8	NEW SONY ID TYPE HR
FREQUENCY RANGE:	1.5	NEW SONY ID TYPE HR
FM. . MW. .		
DC:12V~GROUND		
PART NUMBER	1	
Serial Number		
⎓		L=2
TOP, BOTTOM	1.2	NEW SONY ID TYPE HR
AUDIO OUT FRONT, REAR		
AUDIO OUT, SUB		
ANT		
10A FUSE		
REMOTE IN		
MADE IN THAILAND		
L, R	1	
CERTIFICATION	3	UNIVERS MEDIUM EXTRA CONDENSED(MUSEUM)
SONY CORPORATION	2.5	
FCC ID:AK8MEXBT2700	1.8	NEW SONY ID TYPE HR
IC : 409B-MEXBT2700		
THIS DEVICE~OPERATION	1	NEW SONY ID TYPE HRC
US and foreign~Laboratories.		NEW SONY ID TYPE HR

NOTE 1)THE ADDED Serial No. IS TO BE DETERMINED UNDER INSTRUCTIONS FROM THE MATERIAL SECTION OF ORDERING FACTORY.
2)POSITION OF SERIAL NO.(REFER TO RIGHT). TOLERANCE OF SIZE MUST BE ±0.5.
3)DELIVERY SHALL BE IN ROLLED CONDITION.
4)UNLESS OTHERWISE SPECIFIED, ROUNDING SHALL BE R1.
5)NO LABEL AREA MUST BE LONG ENOUGH TO COVER OUTSIDE SURFACE OF THE ROLLER(ID).

SERIAL NO. (Serial No.) 2"

MATERIAL CONSTRUCTION TABLE

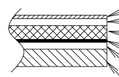

POLYESTER FILM GLOSS FINISH t0.025 LAMINATE
PRINTED SURFACE
POLYESTER-BASE UV COATING POLYESTER FLIM t0.05
ALUMINUM DEPOSITION
ACRYLIC-BASE PRESSURE-SENSITIVE ADHESIVE (LINTEC CORP. PW OR EQUIVALENT)
SILICONE-IMPREGNATED RELEASE PAPER

QUALITY CHARACTERISTICS:ALL CHARACTERISTICS SPECIFIED IN CLAUSE 7 OF SS-00077 "SPECIFICATION LABELS-PARTS DESIGN STANDARDS" MUST BE SATISFIED.

CAUTION IN USE : PAY SPECIAL ATTENTION TO AFFIXING CONDITION SINCE CHEMICALS-PROOF CHARACTERISTICS TEST IS MADE WITH THE LABEL AFFIXED.(SECTION 7-4 OF SONY PARTS DESIGN STANDARD)

この部品には SS-00259-1 に指定する物質を含んだ材料は、使用してはならない。
This part should not contain any substances which are specified in SS-00259-1.

成形用樹脂・インキ・塗料・被覆電線はグリーンパートナー認定取引先から調達すること。
Purchase ink, paint, wire rods, and molding resins only from the business partners that Sony approves as Green Partners.

HISTORY X COUNT	SUFFIX REPL.	ECN-NO. DATE	REVISION	SIGN.
1x				
2x				
3x				
4x				
5x				
6x				

DRAWN BY	PLANNED BY	CHECKED BY	APPROVED BY
STT-C 2007.12.07 TANUPONG	STT-C 2007.12.07 SIRIWAN	EM	

TENTATIVE

MODEL SJ-C619

PART NO. 0-924-057-01

UNIT mm

TOLERANCE STS-3

L≦ 4	±0.2
4 <L≦ 16	±0.3
16 <L≦ 63	±0.4
63 <L≦250	±0.5
250 <L	±0.7

ANGLE

SCALE 2:1

USED ON

RANK

FAMILY

ORIGINAL MODEL MEX-BT2700//Q(U)

MATERIAL(COLOR) REFER ABOVE

FINISH(COLOR) BASE:ALUMINUM LETTER:BLACK

DESCRIPTION

(E) LABEL, MODEL NUMBER(U)

(J) LABEL, MODEL NUMBER(U)

PART NO. ~~4-124-438-01~~

SHEET 1/1

THIS DOCUMENT IS THE PROPRIETARY PROPERTY OF SONY. ITS USE IS AUTHORIZED ONLY FOR RESPONDING TO A REQUEST FOR QUOTATION. OR FOR THE PERFORMANCE OF WORK FOR SONY. ALL QUESTIONS MUST BE REFERRED TO THE LOCAL PURCHASING DEPARTMENT OF SONY.

ISSUED 08.08.14

DRAWING (TYPE D22)

SONY STANDARD 90.10

A2