CONFIDENTIAL

SONY

CAD

LOCALLY PROCURED PART
COUNTRY OF ORIGIN (THAILAND)

WRITTEN LETTERS	LETTER HEIGHT	TYPE FACE
SONY®	L=13	SONY LOGOTYPE WITH ® SYMBOL(NO.2)
MODEL NO.	1.2	NEW SONY ID TYPE HR
DSX-S310BTX	2	NEW SONY ID TYPE HRC
FM/AM DIGITAL MEDIA PLAYER		NEW SONY ID TYPE HR
FREQUENCY RANGE:	1.5	NEW SONY ID TYPE HR
FM 87.5MHz-107.9MHz		
AM 530kHz-1710kHz		
DC:12V NEGATIVE GROUND		
⎓	a=2	REFER TO THE DATA
SERIAL NO.	1.2	NEW SONY ID TYPE HR
MADE IN THAILAND		
HECHO EN TAILANDIA		
<PART NUMBER>	1	
<NUMBERING PRINT>	3	(NEW SONY ID TYPE HR)
THIS DEVICE COMPLIES WITH ~ MAY CAUSE UNDESIRED OPERATION.	1	NEW SONY ID TYPE HRC
FCC ID:AK8DSXS310BT	1.5	

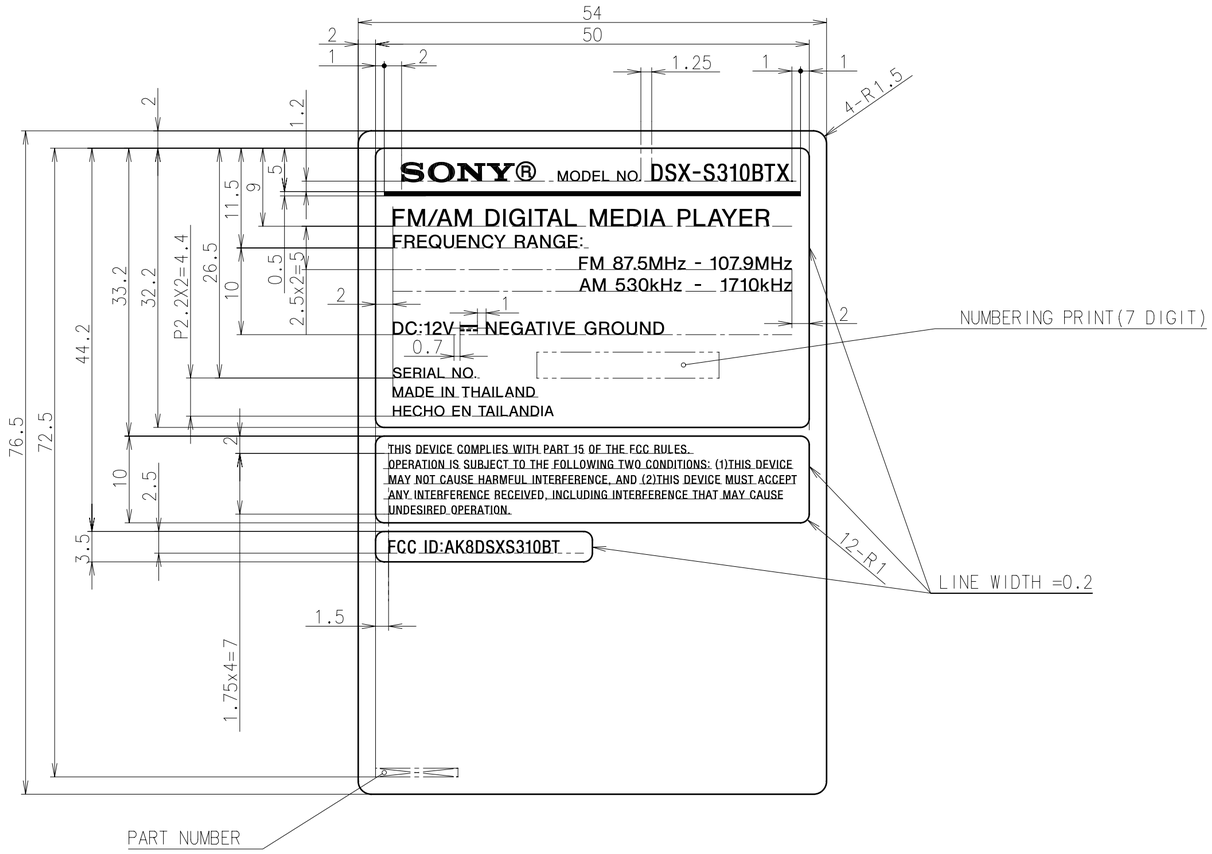

NOTE 1) THE NUMBER OF NUMBERING PRINT IS INFORMED BY THE MATERIAL CONTROL SECTION OF ORDERING FACTORY.
2) REFER TO THE RIGHT FOR THE POSITION OF NUMBERING PRINT.
3) THE ROLL STYLE IS REQUIRED FOR DELIVERY.
4) NO LABEL AREA SHALL BE LONG ENOUGH FOR COVERING THE SURFACE OF THE LABEL WHEN DELIVERY.

MATERIAL CONSTRUCTION TABLE

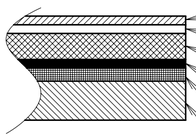

POLYESTER FILM MATT FINISH t0.025 LAMINATE (REFER TO TABLE 1)
PRINTED SURFACE
POLYESTER-BASE UV COATING POLYESTER FILM t0.05
ALUMINUM DEPOSITION
} (REFER TO TABLE1)
ACRYLIC-BASE PRESSURE-SENSITIVE ADHESIVE (LINTEC CORP. A-300 OR EQUIVALENT)
SILICONE-IMPREGNATED RELEASE PAPER

QUALITY CHARACTERISTICS:ALL CHARACTERISTICS SPECIFIED IN CLAUSE 7 OF STM-1077 "SPECIFICATION LABELS-PARTS DESIGN STANDARDS" MUST BE SATISFIED.

TABLE 1 : MATERIALS SPECIFICATION

ITEM	POLYESTER FILM		POLYESTER-BASE + ALUMINUM DEPOSITION	
	PRODUCT NAME	MAKER	PRODUCT NAME	MAKER
1	OVER LAMINATE LABEL	THAI KK	TLSM50	TAIWAN KK
2	PETN25 NPL 6LK	LINTEC	TLSMB50	THAI KK
CHOOSE ONE MATERIAL ITEM IN THE SAME ROW FROM THIS TABLE FOR MAKE PART				

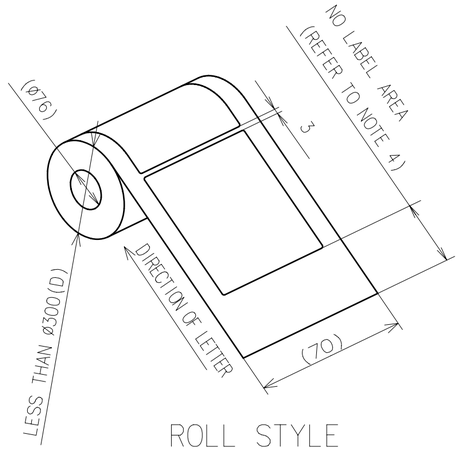

ROLL STYLE

この部品には SS-00259-01 に指定する物質を含んだ材料は，使用してはならない。
This part should not contain any substances which are specified in SS-00259-01.

再生樹脂・被覆電線はグリーンパートナー認定取引先から調達すること。
Purchase recycled resins and wire rods only from the business partners that Sony approves as Green Partners.

HISTORY X COUNT	SUFFIX "REPL."	ECN-NO. DATE	REVISION	SIGN.
6 x		– ''		
5 x		– ''		
4 x		– ''		
3 x		– ''		
2 x		– ''		
1 x		EC-E31860 '11.03.23	P/N RELEASE	

DRAWN BY	PLANNED BY	CHECKED BY	APPROVED BY
PI&S-PE '11.03.23 ITO	PI&S-PE '11.03.23 ITO	PI&S-PE '11.03.23 UCHIDA	PI&S-PE '11.03.24 TANABE

TENTATIVE

MODEL SJ-D006

PART NO. 0-345-360-01

UNIT mm | ANGLE | SCALE 2:1 | MATERIAL(COLOR) PETP+AL+PSA (SILVER) <REFER TO THE LEFT>

TOLERANCE	STS-3
L≤ 4	±0.2
4 <L≤ 16	±0.3
16 <L≤ 63	±0.4
63 <L≤ 250	±0.5
250 <L≤ 400	±0.7
400 <L≤ 1000	±1.5
1000 <L≤ 2000	±3
2000 <L≤ 4000	±4

USED ON | RANK | FAMILY

ORIGINAL MODEL DSX-S310BTX//Q(U)

FINISH(COLOR) PRINT:BLACK POLYESTER FILM: MAT

TITLE/DESCRIPTION
(E) LABEL,MODEL NUMBER(U)
(J) ネメイハ゛ン (U)

PART NO. 4-286-687-01 | SHEET 1/1

THIS DOCUMENT IS THE PROPRIETARY PROPERTY OF SONY. ITS USE IS AUTHORIZED ONLY FOR RESPONDING TO A REQUEST FOR QUOTATION,OR FOR THE PERFORMANCE OF WORK FOR SONY. ALL QUESTIONS MUST BE REFERRED TO THE LOCAL PURCHASING DEPARTMENT OF SONY. THE REPRODUCTION, DISTRIBUTION AND UTILIZATION OF THIS DOCUMENT AS WELL AS THE COMMUNICATION OF ITS CONTENTS TO OTHERS WITHOUT EXPRESS AUTHORIZATION IS PROHIBITED. OFFENDERS WILL BE HELD LIABLE FOR THE PAYMENT OF DAMAGES. ALL RIGHTS RESERVED IN THE EVENT OF THE GRANT OF A PATENT, UTILITY MODEL OR DESIGN.COPYRIGHT RESERVED.

ISSUED '11.03.23

F spec - D22

CATIA

DRAWING

SONY STANDARD

A2 '09.4