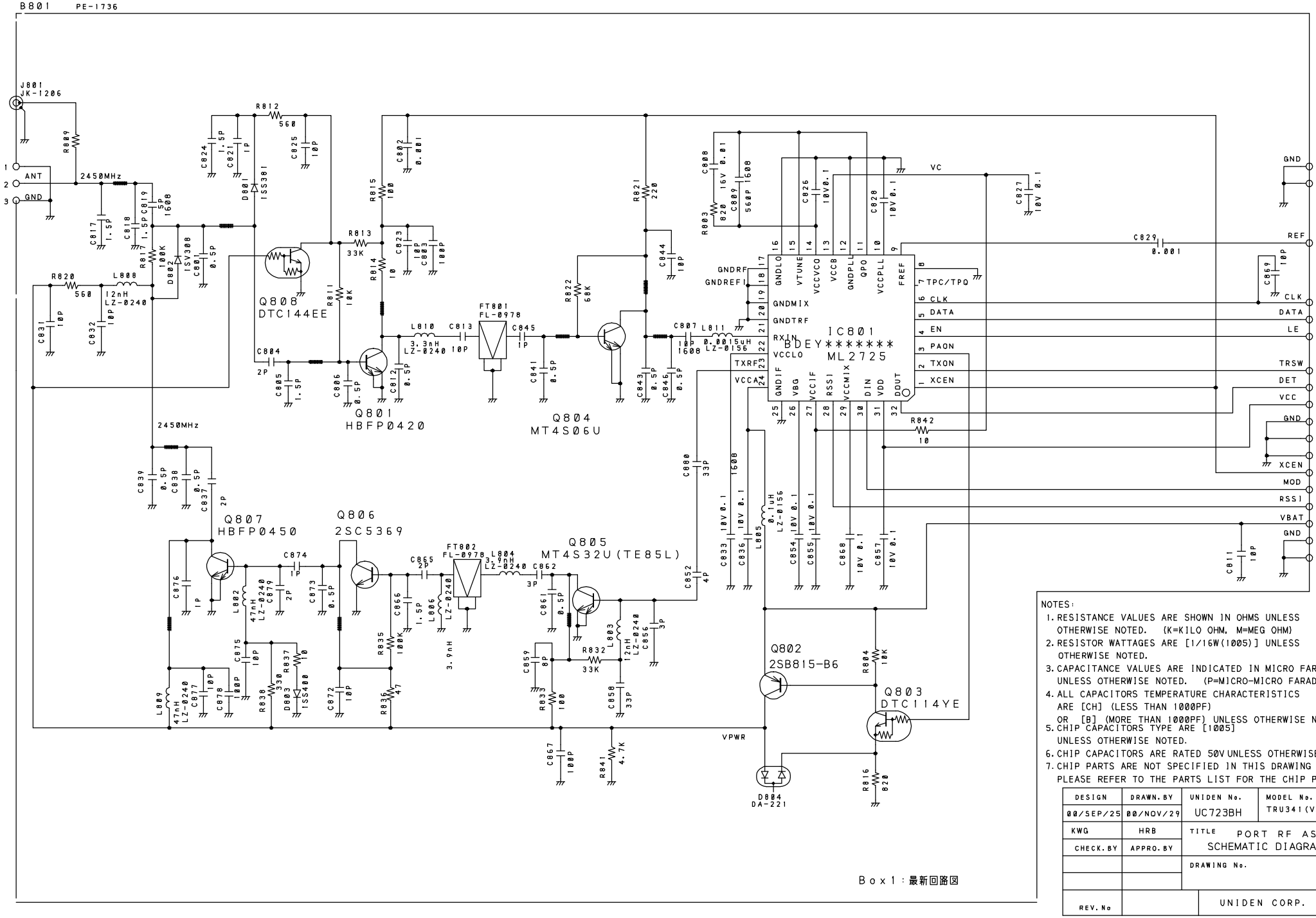

NOTES:

1. RESISTANCE VALUES ARE SHOWN IN OHMS UNLESS OTHERWISE NOTED. (K=KILO OHM, M=MEG OHM)
2. RESISTOR WATTAGES ARE [1/16W(1005)] UNLESS OTHERWISE NOTED.
3. CAPACITANCE VALUES ARE INDICATED IN MICRO FARADS UNLESS OTHERWISE NOTED. (P=MICRO-MICRO FARAD)
4. ALL CAPACITORS TEMPERATURE CHARACTERISTICS ARE [CH] (LESS THAN 1000PF) OR [B] (MORE THAN 1000PF) UNLESS OTHERWISE NOTED.
5. CHIP CAPACITORS TYPE ARE [1005] UNLESS OTHERWISE NOTED.
6. CHIP CAPACITORS ARE RATED 50V UNLESS OTHERWISE NOTED.
7. CHIP PARTS ARE NOT SPECIFIED IN THIS DRAWING PLEASE REFER TO THE PARTS LIST FOR THE CHIP PARTS.

DESIGN	DRAWN.BY	UNIDEN No.	MODEL No.
00/SEP/25	00/NOV/29	UC723BH	TRU341(VA)
KWG	HRB	TITLE PORT RF ASSY SCHEMATIC DIAGRAM	
CHECK.BY	APPRO.BY		
		DRAWING No.	
REV.No		UNIDEN CORP.	

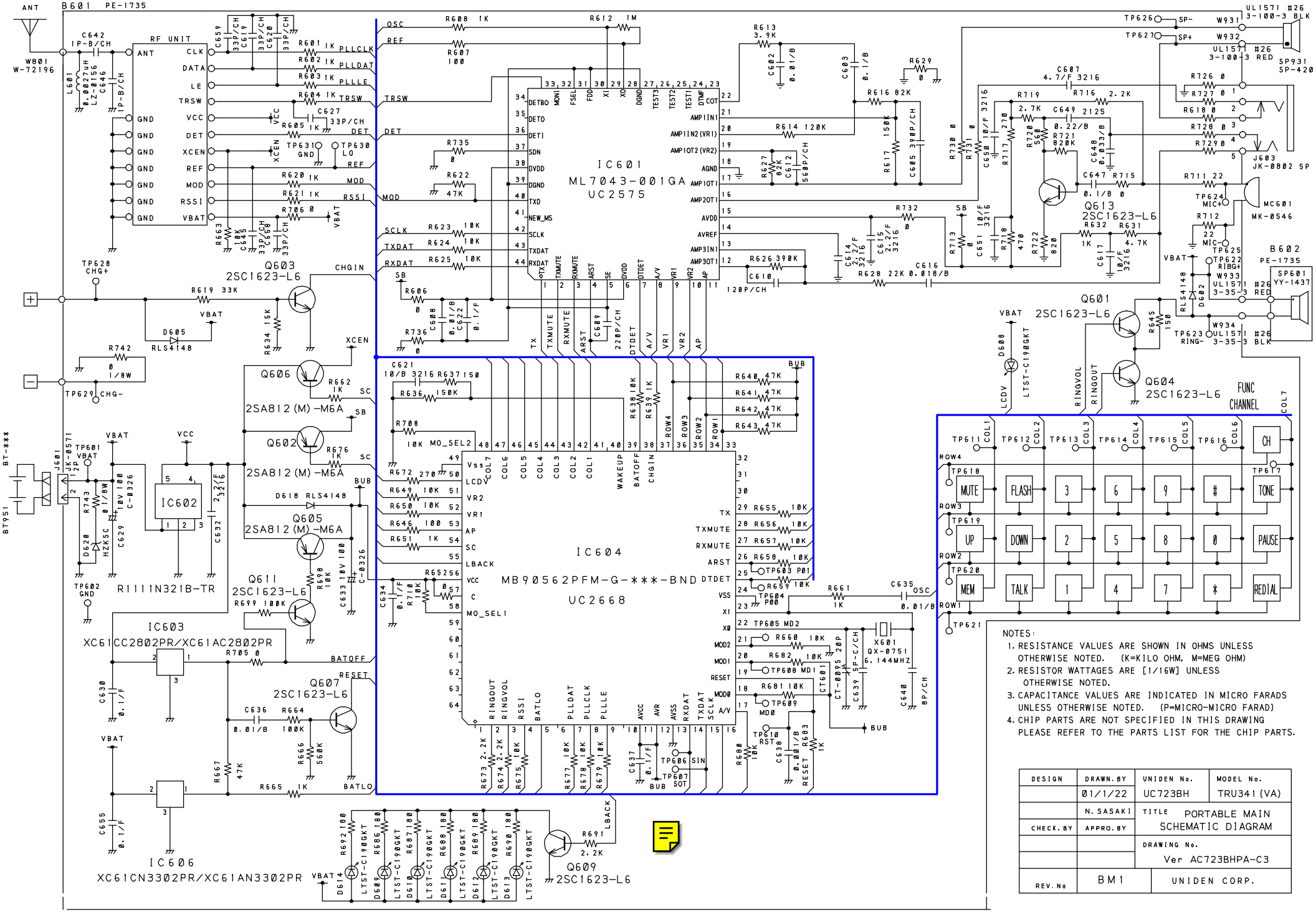
B601 PE-1735
ANT
W801 W-72196
RF UNIT
IC601 ML7043-001GA UC2575
IC604 MB90562PFM-G-***-BND UC2668
IC602
IC603 XC61CC2802PR/XC61AC2802PR
IC606 XC61CN3302PR/XC61AN3302PR
Q601 2SC1623-L6
Q602 2SA812(M)-M6A
Q603 2SC1623-L6
Q604 2SC1623-L6
Q605 2SA812(M)-M6A
Q606 2SA812(M)-M6A
Q607 2SC1623-L6
Q609 2SC1623-L6
Q611 2SC1623-L6
Q613 2SC1623-L6
R1111N321B-TR
X601 QX-0751 6.144MHZ
B602 PE-1735
SP931 SP-420
SP601 YY-1437
MC601 MK-0546
J603 JK-0802 5P
J601 JK-0571 2P
BT951
BT-***
FUNC CHANNEL
CH
MUTE
FLASH
TONE
UP
DOWN
PAUSE
MEM
TALK
REDIAL
NOTES:
1. RESISTANCE VALUES ARE SHOWN IN OHMS UNLESS OTHERWISE NOTED. (K=KILO OHM, M=MEG OHM)
2. RESISTOR WATTAGES ARE [1/16W] UNLESS OTHERWISE NOTED.
3. CAPACITANCE VALUES ARE INDICATED IN MICRO FARADS UNLESS OTHERWISE NOTED. (P=MICRO-MICRO FARAD)
4. CHIP PARTS ARE NOT SPECIFIED IN THIS DRAWING PLEASE REFER TO THE PARTS LIST FOR THE CHIP PARTS.
DESIGN
DRAWN. BY
UNIDEN No.
MODEL No.
01/1/22
UC723BH
TRU341 (VA)
N. SASAKI
TITLE
PORTABLE MAIN SCHEMATIC DIAGRAM
CHECK. BY
APPRO. BY
DRAWING No.
Ver AC723BHPA-C3
REV. No
BM1
UNIDEN CORP.

B301 PE-1736

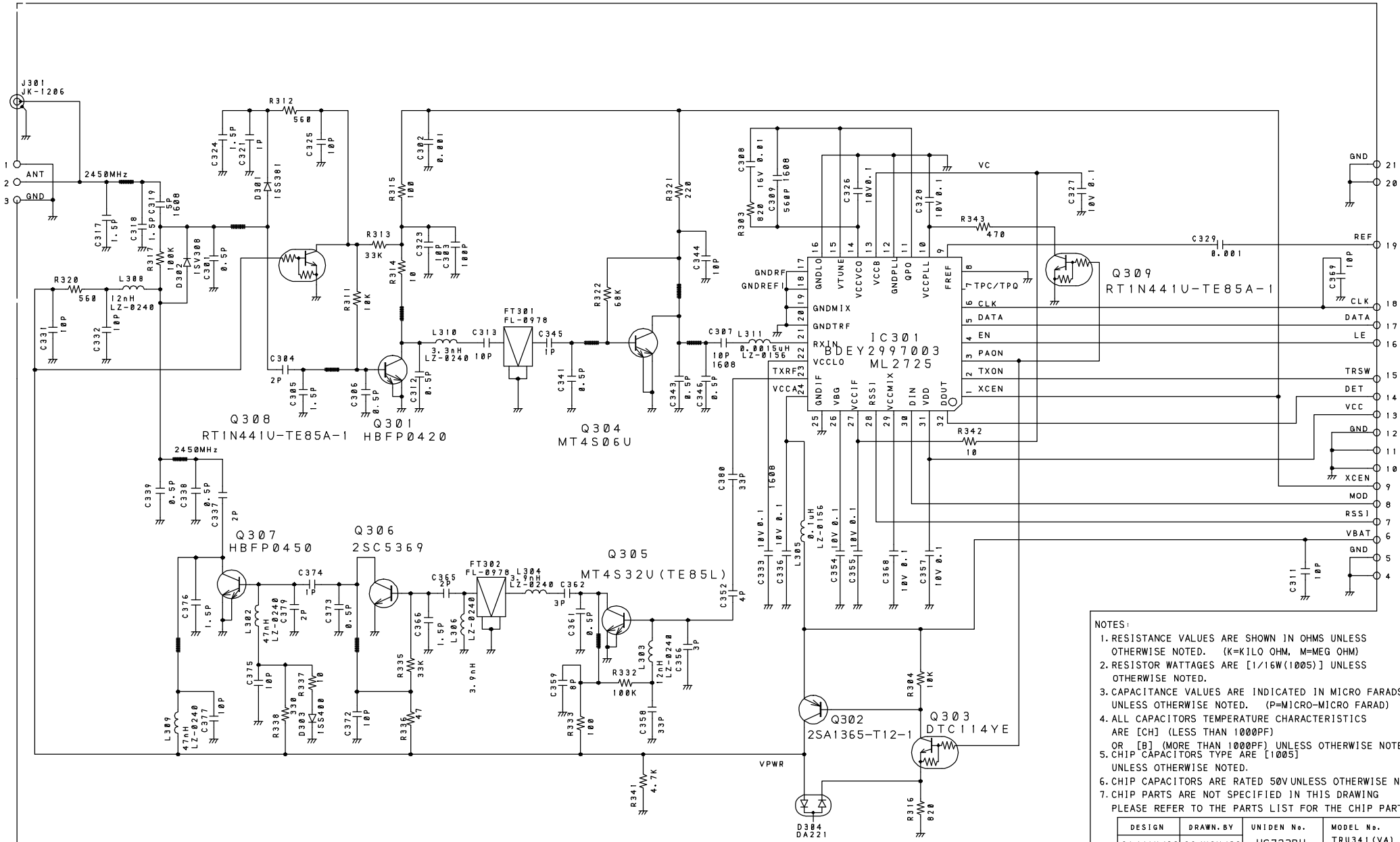

NOTES:

1. RESISTANCE VALUES ARE SHOWN IN OHMS UNLESS OTHERWISE NOTED. (K=KILO OHM, M=MEG OHM)
2. RESISTOR WATTAGES ARE [1/16W(1005)] UNLESS OTHERWISE NOTED.
3. CAPACITANCE VALUES ARE INDICATED IN MICRO FARADS UNLESS OTHERWISE NOTED. (P=MICRO-MICRO FARAD)
4. ALL CAPACITORS TEMPERATURE CHARACTERISTICS ARE [CH] (LESS THAN 1000PF) OR [B] (MORE THAN 1000PF) UNLESS OTHERWISE NOTED.
5. CHIP CAPACITORS TYPE ARE [1005] UNLESS OTHERWISE NOTED.
6. CHIP CAPACITORS ARE RATED 50V UNLESS OTHERWISE NOTED.
7. CHIP PARTS ARE NOT SPECIFIED IN THIS DRAWING PLEASE REFER TO THE PARTS LIST FOR THE CHIP PARTS.

DESIGN	DRAWN.BY	UNIDEN No.	MODEL No.
01/JAN/22	00/NOV/29	UC723BH	TRU341(VA)
KWG	HRB	TITLE BASE RF ASSY SCHEMATIC DIAGRAM	
CHECK.BY	APPRO.BY		
		DRAWING No.	
REV.No	BM1	UNIDEN CORP.	

Box1：最新回路図

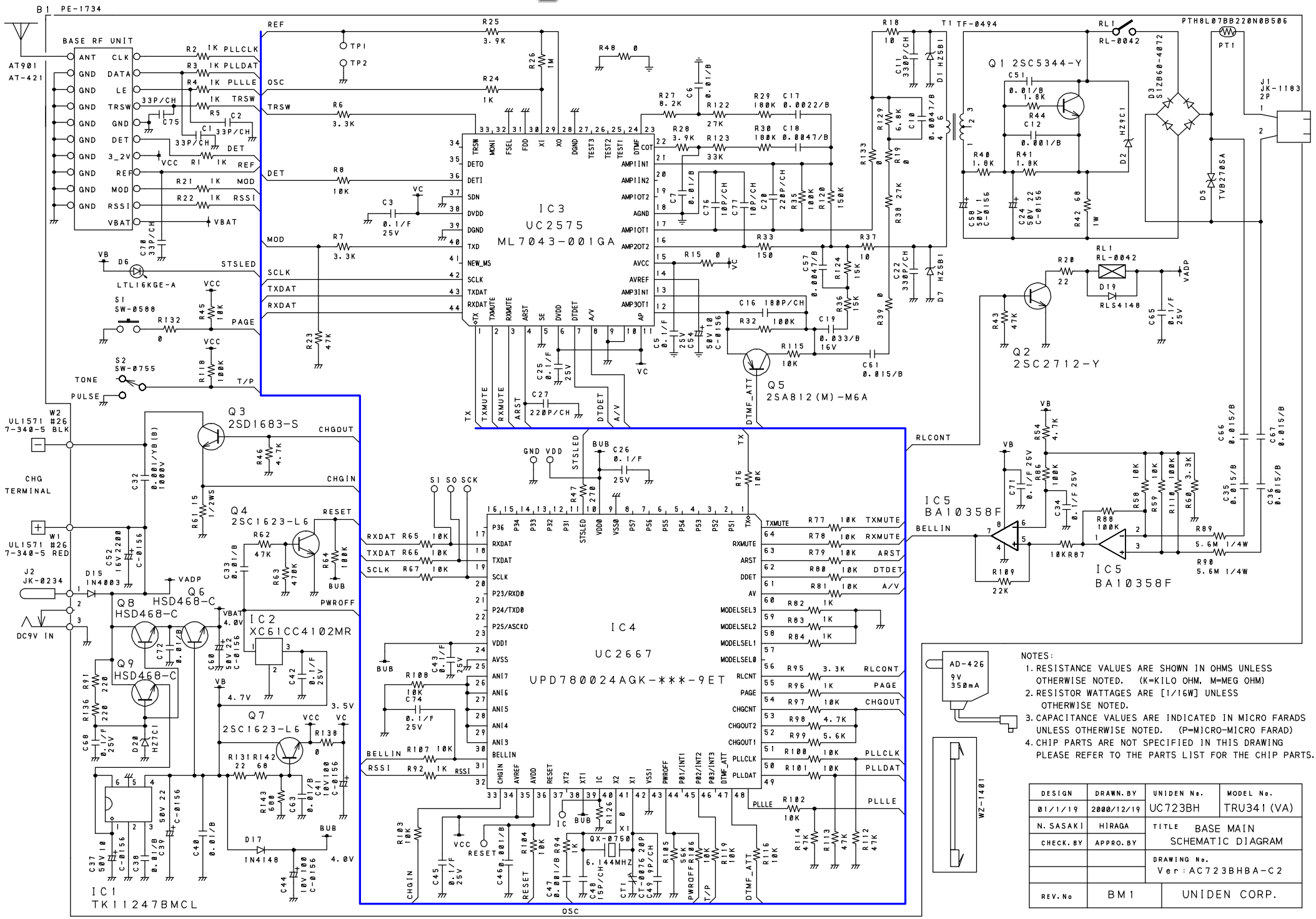
B1 PE-1734
AT901
AT-421
BASE RF UNIT
ANT
GND
CLK
DATA
LE
TRSW
DET
3_2V
REF
MOD
RSSI
VBAT
IC3
UC2575
ML7043-001GA
IC4
UC2667
UPD780024AGK-***-9ET
IC1
TK11247BMCL
IC2
XC61CC4102MR
IC5
BA10358F
Q1 2SC5344-Y
Q2
2SC2712-Y
Q3
2SD1683-S
Q4
2SC1623-L6
Q5
2SA812(M)-M6A
Q6
HSD468-C
Q7
2SC1623-L6
Q8
HSD468-C
Q9
HSD468-C
T1 TF-0494
RL1
RL-0042
PTH8L07BB220N0B506
J1
JK-1183
2P
J2
JK-0234
DC9V IN
CHG
TERMINAL
UL1571 #26
7-340-5 BLK
UL1571 #26
7-340-5 RED
S1
SW-0588
S2
SW-0755
TONE
PULSE
PAGE
T/P
STSLED
LTL16KGE-A
AD-426
9V
350mA
WZ-1401
NOTES:
1. RESISTANCE VALUES ARE SHOWN IN OHMS UNLESS OTHERWISE NOTED. (K=KILO OHM, M=MEG OHM)
2. RESISTOR WATTAGES ARE [1/16W] UNLESS OTHERWISE NOTED.
3. CAPACITANCE VALUES ARE INDICATED IN MICRO FARADS UNLESS OTHERWISE NOTED. (P=MICRO-MICRO FARAD)
4. CHIP PARTS ARE NOT SPECIFIED IN THIS DRAWING PLEASE REFER TO THE PARTS LIST FOR THE CHIP PARTS.
DESIGN
01/1/19
DRAWN. BY
2000/12/19
UNIDEN No.
UC723BH
MODEL No.
TRU341 (VA)
N. SASAKI
HIRAGA
TITLE
BASE MAIN
SCHEMATIC DIAGRAM
CHECK. BY
APPRO. BY
DRAWING No.
Ver:AC723BHBA-C2
REV. No
BM1
UNIDEN CORP.