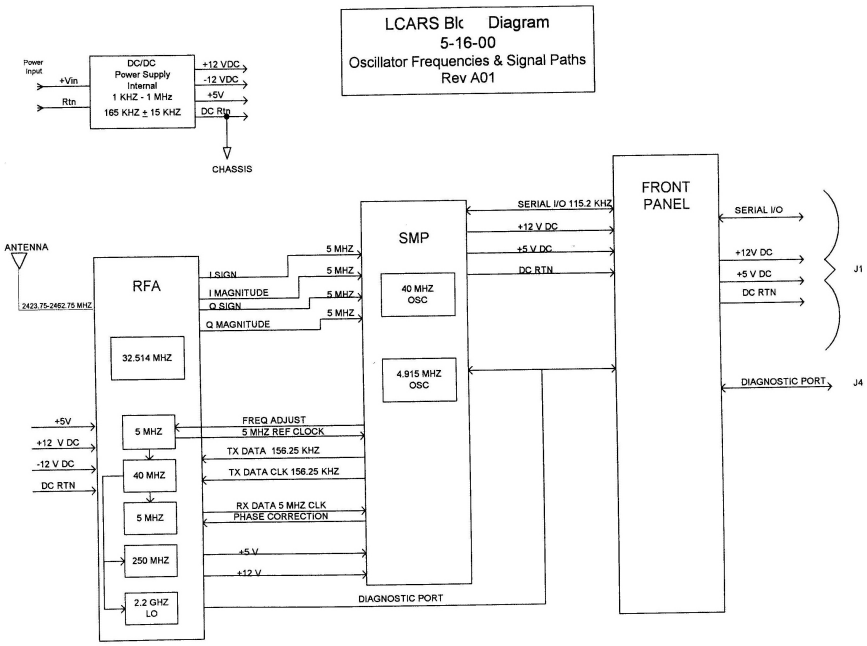
LCARS Blc Diagram
5-16-00
Oscillator Frequencies & Signal Paths
Rev A01
Power Input
+Vin
Rtn
DC/DC
Power Supply
Internal
1 KHZ - 1 MHz
165 KHZ ± 15 KHZ
+12 VDC
-12 VDC
+5V
DC Rtn
CHASSIS
ANTENNA
2423.75-2462.75 MHZ
RFA
32.514 MHZ
5 MHZ
40 MHZ
5 MHZ
250 MHZ
2.2 GHZ
LO
+5V
+12 V DC
-12 V DC
DC RTN
I SIGN
I MAGNITUDE
Q SIGN
Q MAGNITUDE
5 MHZ
5 MHZ
5 MHZ
5 MHZ
FREQ ADJUST
5 MHZ REF CLOCK
TX DATA 156.25 KHZ
TX DATA CLK 156.25 KHZ
RX DATA 5 MHZ CLK
PHASE CORRECTION
+5 V
+12 V
DIAGNOSTIC PORT
SMP
40 MHZ
OSC
4.915 MHZ
OSC
SERIAL I/O 115.2 KHZ
+12 V DC
+5 V DC
DC RTN
FRONT
PANEL
SERIAL I/O
+12V DC
+5 V DC
DC RTN
J1
DIAGNOSTIC PORT
J4