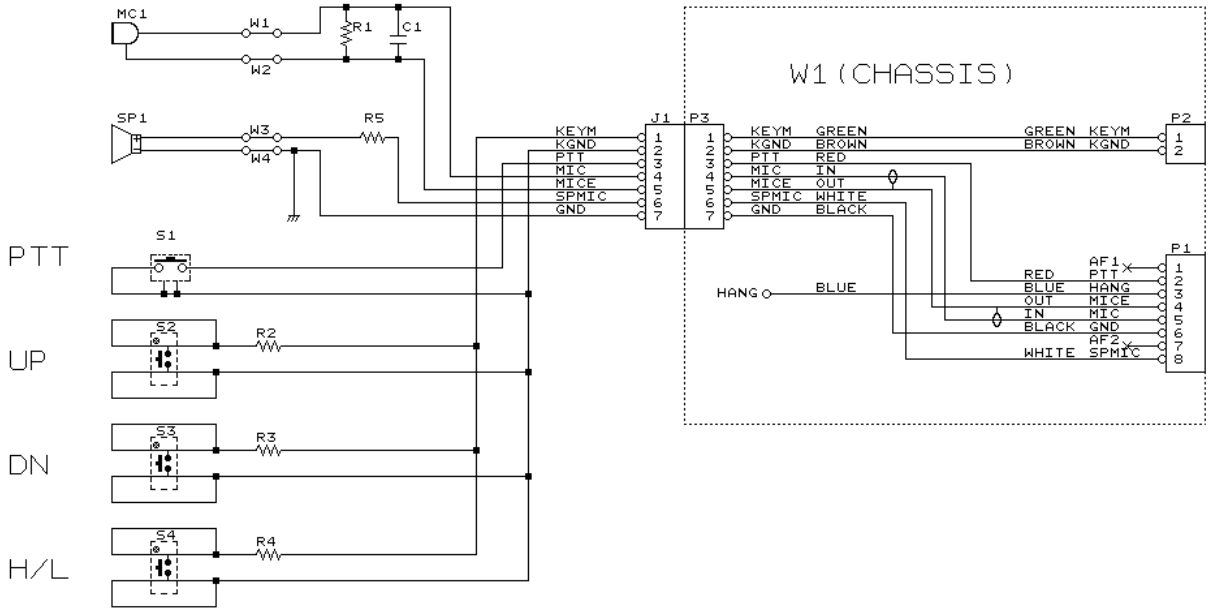

REVISIONS						
1	. .		DATE 2000.-5.-1		MODEL IC-M502	
2	. .		MIC SCHEMATIC DIAGRAM			
3	. .				DWN. NO.	
4	. .		APPD.	CHKD.		DWN. BY:
5	. .					
6	. .					
7	. .					
8	. .		ICOM			Icom Inc.