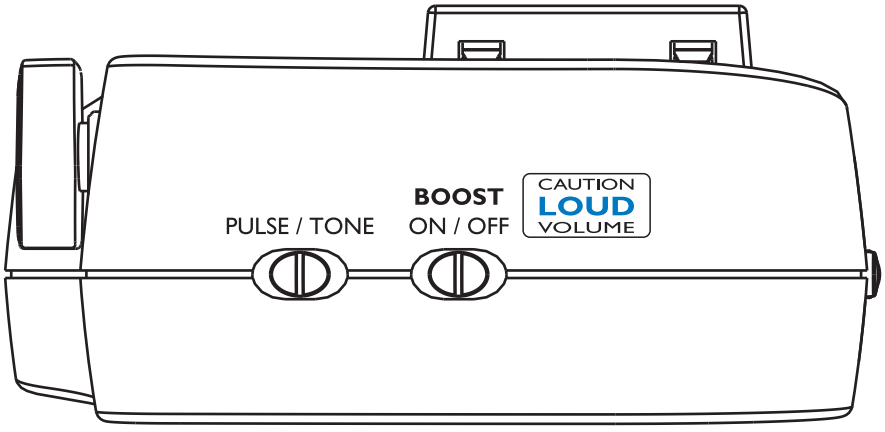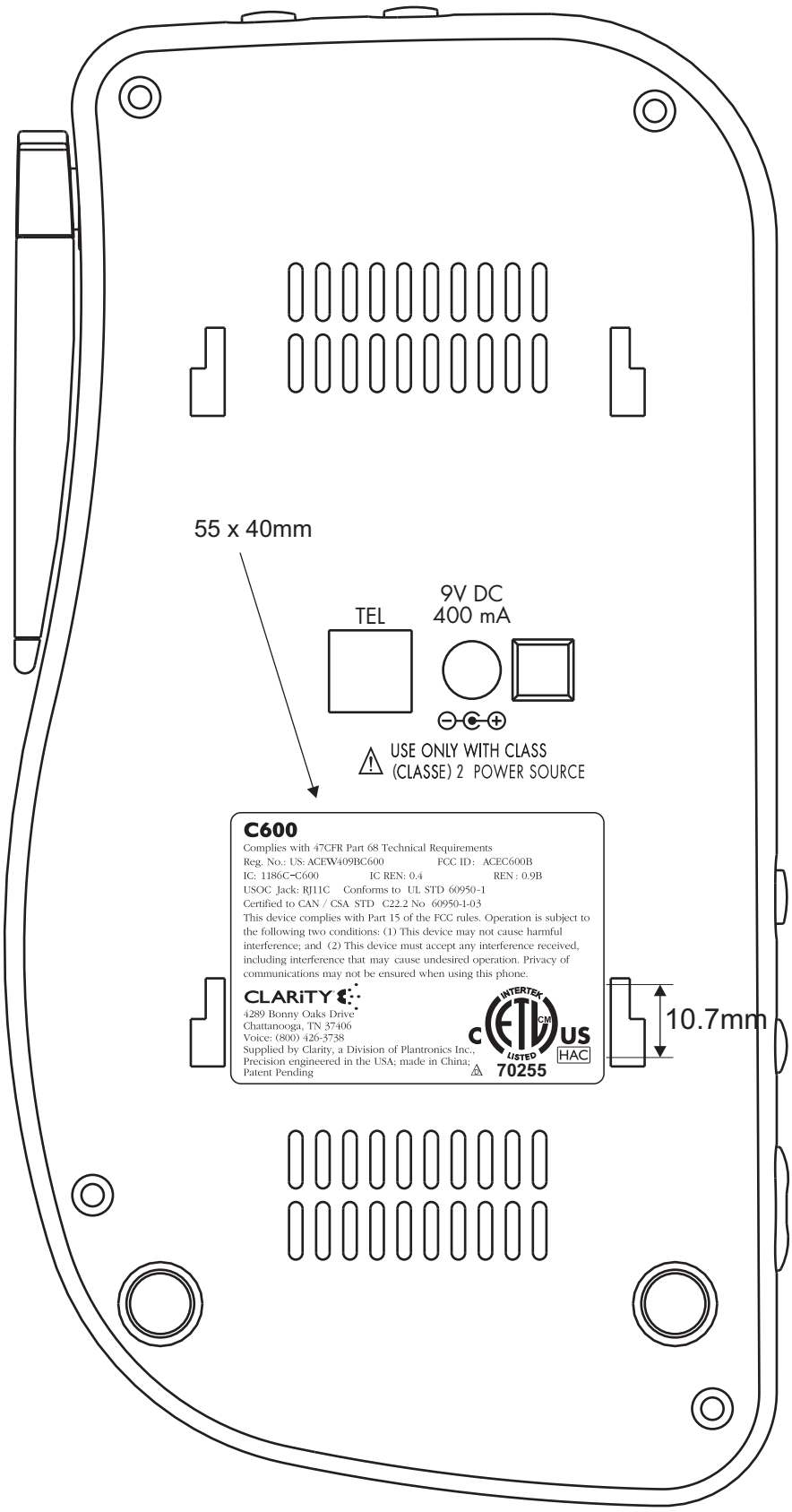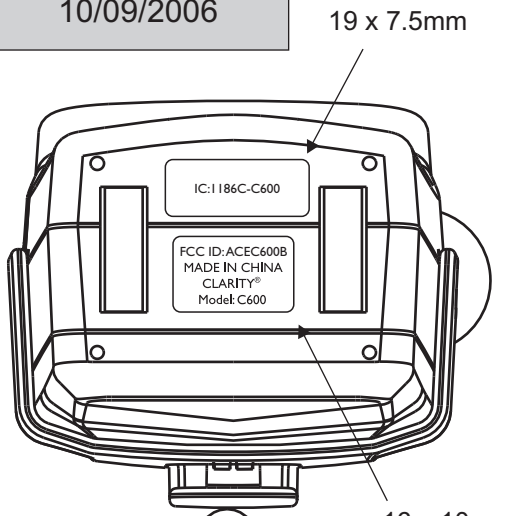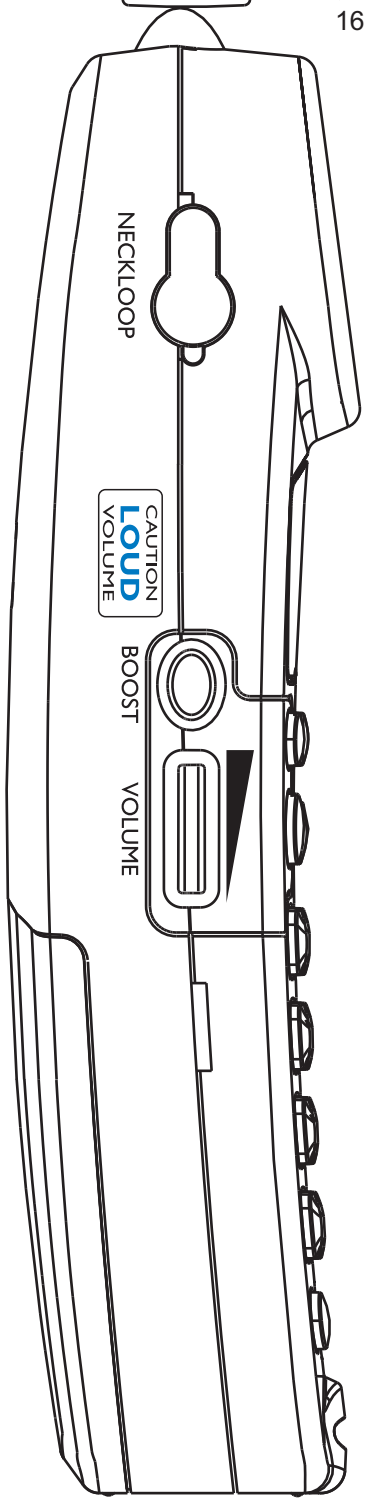C600-2
Rev.3
10/09/2006