C430
Rev.1
02/04/2004

Bottom of base unit:

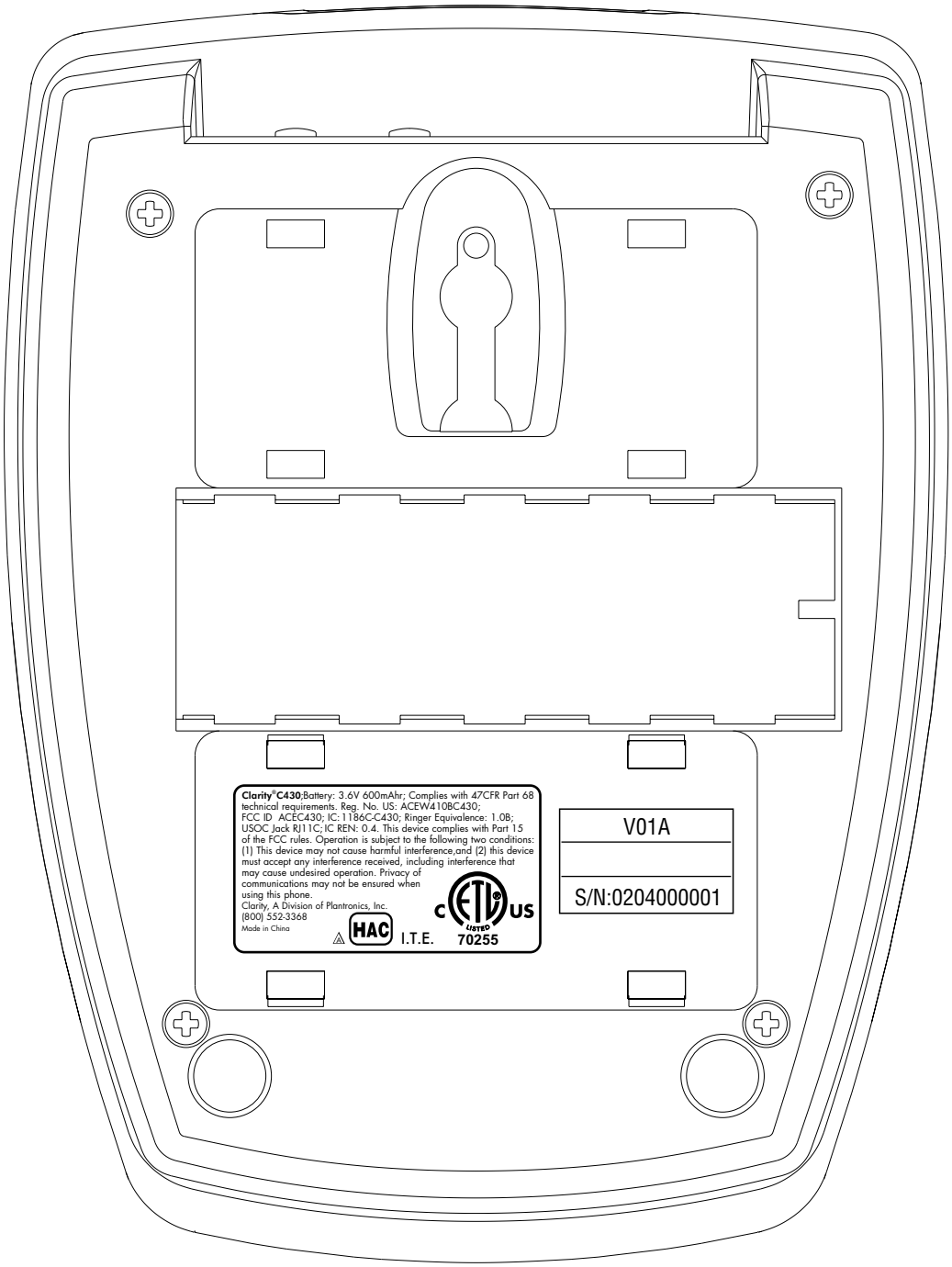

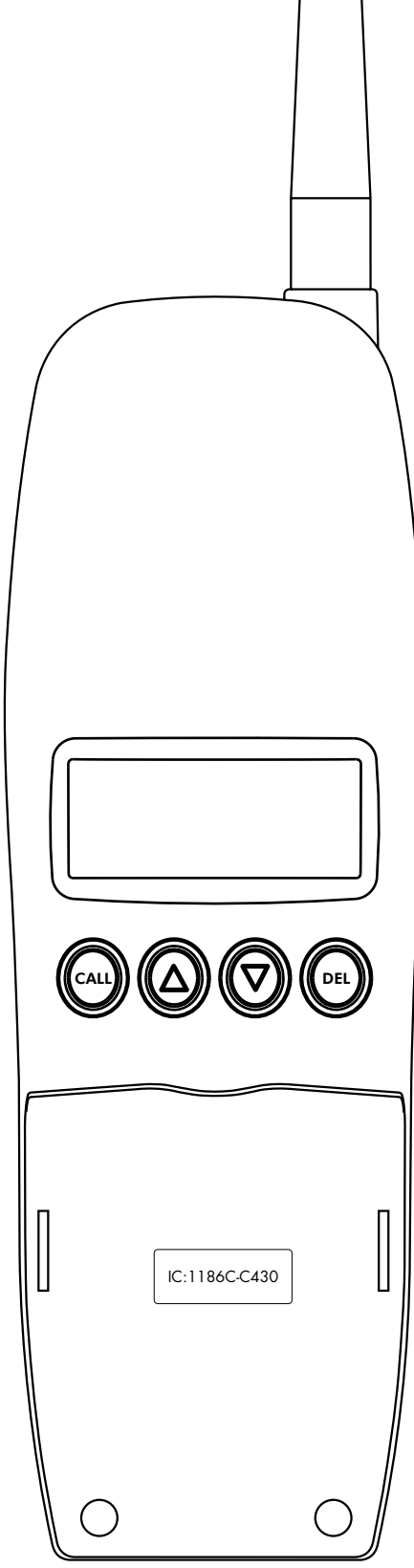
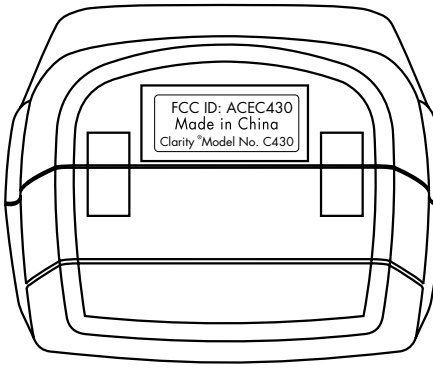
Bottom of handset: