MIXER INSTRUCTION MANUAL

4-6 CHANNEL MIC/LINE MIXER

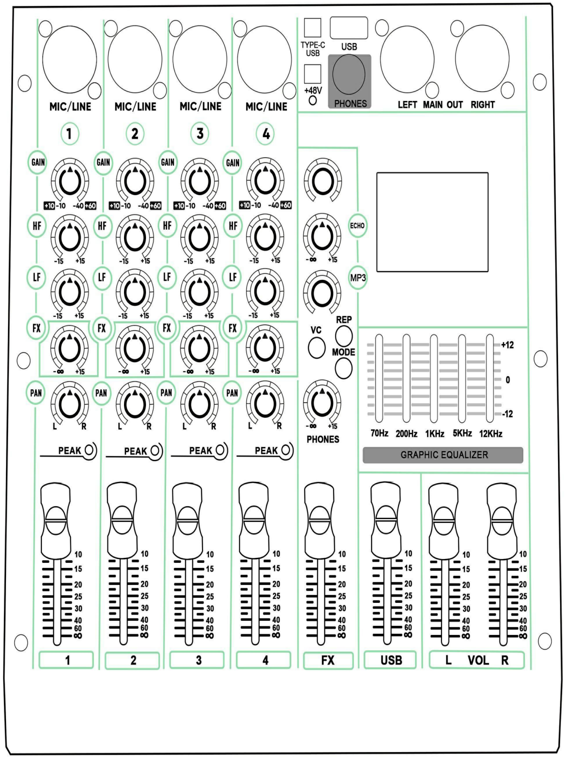

General Precautions

1. Damage:To prevent damage to the controls and cosmetics avoid placing heavy objects on the control surface,scratching the surface with sharp objects,or rough handling and vibration.

2. Environment:Protect from excessive dirt,dust,heat and vibration when operating and storing.Avoid tobacco ash,smoke,drinks spillage, and exposure to rain and moisture.If the console becomes wet,switch off and remove mains power immediately.Allow to dry out thoroughly before using again.

3.Hearing:To avoid damage to your hearing do not operate any sound system at excessively high volume.This also applies to any close-to-ear monitoring such as headphone and IEM transducers.Continued exposure to high volume sound can cause frequency selective or wide range hearing loss.

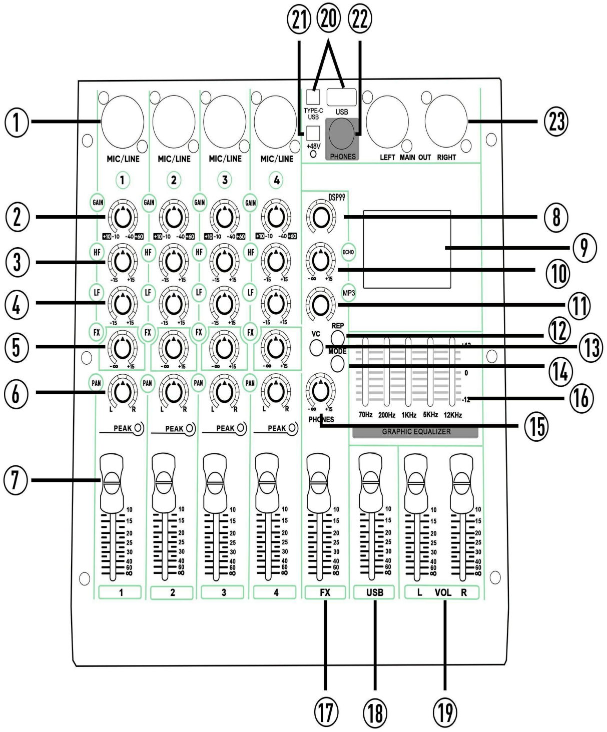

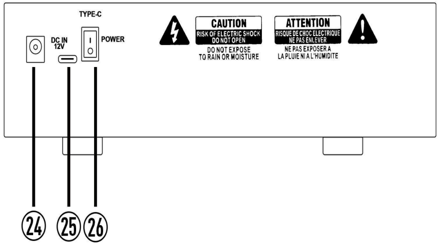
TYPE-C
DC IN 12V
POWER
CAUTION
RISK OF ELECTRIC SHOCK DO NOT OPEN
DO NOT EXPOSE TO RAIN OR MOISTURE
ATTENTION
RISQUE DE CHOC ELECTRIQUE NE PAS ENLEVER
NE PAS EXPOSER A LA PLUIE NI A L'HUMIDITE
㉔
㉕
㉖

1.Dual-purposemicrophoneinputin
typebalancedlineinput,standard

2.Gain control:mainly adjusts the
signal to make the input signal

3.Treble control:The treble part o
always set to the 12 o'clock posi
the treble according to the spea
preferences.Turn this control ke

4.Bass control:The bass part of a
set to the 12 o'clock position of
according to the speaker,listeni
Turn this control key clockwise

5.FX effect send:Use this knob to
signal send

6.Balance control:It determines t
sent to the stereo output

7.Channel signal fader:controls th
channel,that is,controls the cha

8.Digital effect adjustment:You ca
turning this encoder and press
effect mode.There are 99 effec

9.Digital effects and MP3 display

10.Digital effect delay adjustmen
this knob to adjust the effect f
adjustment.

11.MP3/BT signal adjustment kno
signal output level of the MP3/
sound

12.MP3 Repeat Button: Press this
looping. Release to disable rep

13.Vocal Cancel Button:Press to e
maintaining instrumental acc
original audio playback.

14.The main menu key,press ligh

nterface,standard connector XLR
connector TRS type

sensitivity of each branch input
reach a stable level

f a single channel.This control is
ition of the clock.You can control
ker,listening position,and listener's
ey clockwise to increase its volume.

single channel.This control is always
the clock.You can control the bass
ng position,and listener's preferences.
to increase its volume.

adjust the size of the channel effect

he left and rightchannel signal levels

ne output level of the corresponding
nnel sound

an switch the digital effect mode by
the button to determine the digital
t modes

color screen

t and percentage adjustment:Use
rom 0-20 delay and percentage

b:Twist this knob to adjust the
BT, that is,controls the input

button to enable MP3 playback
peat mode.

liminate vocal tracks while
ompaniment. Release to restore

tly to enter the multi-level settings.

15.Headphone signal adjustment knob:Twist this knob to adjust the signal output level of the headphone [PHONE socket]

16.Stereo Graphic Equalizer:Dual five-band equalization provides tone control of each frequency and achieves precise quality sound through the final tone

17.Digital Master Effect Fader: Controls the output level of all digital effects, adjusting the overall volume of processed effects.

18.MP3 channel signal fader:controls the output level of the corresponding channel,that is,controls the channel volume

19.Main output channel fader:controls the output level of the left and right main channels,that is,controls the channel volume

20.TYPE-C/USB Toggle Switch:Press to select USB audio channel, release to switch to TYPE-C audio input.

21.48V phantom power switch: Generally,when using a condenser microphone,you need to turn on the 48V phantom power switch.

22.Headphone monitoring port:This port is a headphone monitoring port. monitor the main signal and individually monitor the output of each signal.

23.Main output terminal:left and right main sound output interface terminals,connected to the power amplifier to drive the speakers for normal playback

24.[DC IN 12V] Power Jack: Connect the included power cord here. First,connect the power cord to thisunit,and then plug it into an AC outlet.

25.TYPE-C Interface:Connect smartphones or laptops to this port for audio playback or real-time live streaming.

26.Power switch:turn on/off the mixer

Installation part

Unbalanced 1/4" plug

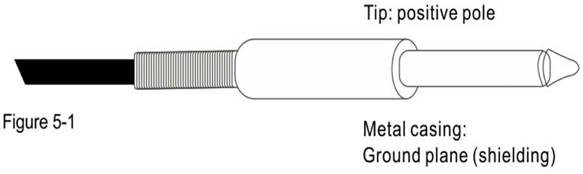

Figure 5-1

3-pin cardon female connector

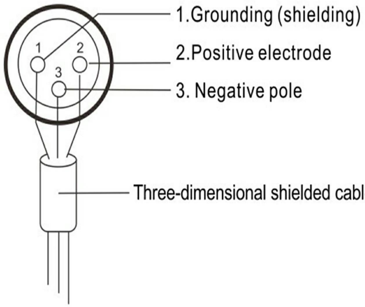

Figure 5-2

TECHNICAL SPECIFICATIONS

MODEL / CONDITIN	4	6
Operating Level	Mic Input: 28 dBu Line Input: 21 dBu All Other Inputs: 21 dBu	Mic Input: 28 dBu Line Input: 21 dBu All Other Inputs: 21 dBu
Rated Output	Main Output: +4 dBu All Other Outputs: +4 dBu Maximum Output: 20 dBu	Main Output: +4 dBu All Other Outputs: +4 dBu Maximum Output: 20 dBu
Frequency Response	Mic to Main Output: +0, -3 dB, <20 Hz to 120 kHz	Mic to Main Output: +0, -3 dB, <20 Hz to 120 kHz
Input Impedance	Mic Input: >2 kΩ Line Input: >10 kΩ Main Output: >100 Ω	Mic Input: >2 kΩ Line Input: >10 kΩ Main Output: >100 Ω
Equalization (Mono Channels)	High Frequency: 12 kHz ±15 dB Mid Frequency: 2.5 kHz ±15 dB Low Frequency: 80 Hz ±15 dB	High Frequency: 12 kHz ±15 dB Mid Frequency: 2.5 kHz ±15 dB Low Frequency: 80 Hz ±15 dB

Information

About this manual

- The illustrations as shown inthis manual are for instructionalpurposes only, andmay appear somewhat differentfrom those on your device.
- The company names and productnames in this manual arethe trademarks or registered trademarksof ther respective companies.

FCC Warning

This device complies with Part 15 of the FCC R
(1) This device may not cause harmful interfere
interference received, including interference tha

NOTE 1: This equipment has been tested and f
pursuant to part 15 of the FCC Rules. These lim
harmful interference in a residential installation.
energy and, if not installed and used in accorda
communications. However, there is no guarante
this equipment does cause harmful interference
turning the equipment off and on, the user is en
following measures:
- Reorient or relocate the receiving antenna.
- Increase the separation between the equipme
-Connect the equipment into an outlet on a circu
-Consult the dealer or an experienced radio/TV

NOTE 2: Any changes or modifications to this u
responsible for compliance could void the user's

The device has been evaluated to meet general
be used in portable exposure condition without

ules. Operation is subject to the following two conditions:
nce, and (2) this device must accept any
t may cause undesired operation.

ound to comply with the limits for a Class B digital device,
nits are designed to provide reasonable protection against
This equipment generates, uses and can radiate radio frequency
nce with the instructions, may cause harmful interference to radio
e that interference will not occur in a particular installation. If
to radio or television reception, which can be determined by
couraged to try to correct the interference by one or more of the

nt and receiver.
uit different from that to which the receiver is connected.
technician for help.

nit not expressly approved by the party
s authority to operate the equipment.

RF exposure requirement. The device can
restriction.