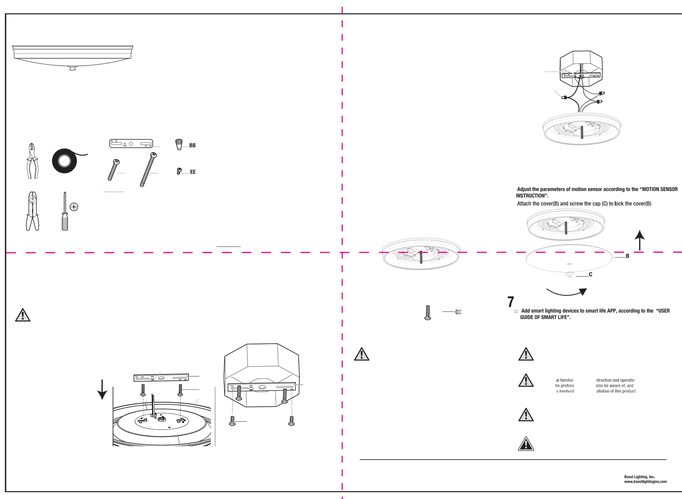

Instruction of DIP Switch Control

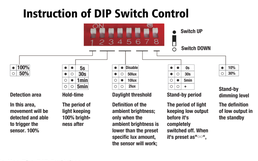

How To Use The DIP Switches

- **Detection Area**
  - ① **If DIP switch 1 is up for ON, the detection area is 100%, that's about 6M.**
  - ② **If DIP switch 1 is down for OFF, the detection area is 50%, that's about 3M.**
- **Hold-time**
  - ① **If both DIP switch 2 and 3 are UP for ON, the holdtime is preset as 5S.**
  - ② **If DIP switch 2 is up and 3 is down, the holdtime is preset as 30S.**
  - ③ **If DIP switch 2 is down and 3 is up, the holdtime is preset as 1min.**
  - ④ **If both DIP switch 2 and 3 are down for OFF, the holdtime is preset as 5min.**
- **Daylight Threshold**
  - ① **If both DIP switch 4 and 5 are UP for ON, the daylight threshold function is disabled, that means as long as motion get detected, the sensor will turn on light.**
  - ② **If DIP switch 4 is up and 5 is down, the daylight threshold is preset as 50LUX, that means the sensor wont's turn on light if the ambient brightness is higher than 50LUX when motion get detected.**
  - ③ **If DIP switch 4 is down and 5 is up, the daylight threshold is preset as 20LUX, that means the sensor wont's turn on light if the ambient brightness is higher than 20LUX when motion get detected.**
  - ④ **If both DIP switch 4 and 5 are down for OFF, the daylight threshold is preset as 10LUX, that means the sensor wont's turn on light if the ambient brightness is higher than 10LUX when motion get detected.**
- **Standby Period**
  - ① **If both DIP switch 6 and 7 are UP for ON, the standby period is preset as 0S, that means the sensor will turn off light directly after holdtime.**
  - ② **If DIP switch 6 is up and 7 is down, the standby period is preset as 30S, that means the sensor will keep the light at standby dimming level for 30S.**
  - ③ **If DIP switch 6 is down and 7 is up, the standby period is preset as 5min, that means the sensor will keep the light at standby dimming level for 5min.**
  - ④ **If both DIP switch 6 and 7 are down, the standby period is preset as infinite, that means the sensor will always keep the light at standby dimming level.**
- **Standby Dimming Level**
  - ① **If DIP switch 8 is up for ON, the standby dimming level is preset as 10%.**
  - ② **If DIP switch 8 is down for OFF, the standby dimming level is preset as 30%.**

Bond Lighting, Inc.
www.bondlightinginc.com

ISEDC Warning

This device complies with Innovation, Science, and Economic Development Canada licence-exempt RSS standard(s). Operation is subject to the following two conditions:

(1) this device may not cause interference, and

(2) this device must accept any interference, including interference that may cause undesired operation of the device.

The device is compliance with RF exposure guidelines, users can obtain Canadian information on RF exposure and compliance.

The device is compliance with RF exposure guidelines, users can obtain Canadian information on RF exposure and compliance.The minimum distance from body to use the device is 20cm.

Avertissement ISEDC

Le présent appareil est conforme aux CNR d' Innovation, Sciences et Développement économique Canada applicables aux appareils radio exempts de licence. L'exploitation est autorisée aux deux conditions suivantes :

(1) l'appareil ne doit pas produire de brouillage, et

(2) l'utilisateur de l'appareil doit accepter tout brouillage radioélectrique subi, même si le brouillage est susceptible d'en compromettre le fonctionnement.

Le présent appareil est conforme Après examen de ce matériel aux conformité ou aux limites d' intensit é de champ RF, les utilisateurs peuvent sur l'exposition aux radiof é quences et la conformit é and compliance d'acqu é rir les informations correspondantes. La distance minimale du corps à utiliser le dispositif est de 20cm.

FCC Warning

This device complies with part 15 of the FCC Rules. Operation is subject to the following two conditions: (1) This device may not cause harmful interference, and (2) this device must accept any interference received, including interference that may cause undesired operation.

Any Changes or modifications not expressly approved by the party responsible for compliance could void the user's authority to operate the equipment.

Note: This equipment has been tested and found to comply with the limits for a Class B digital device, pursuant to part 15 of the FCC Rules. These limits are designed to provide reasonable protection against harmful interference in a residential installation. This equipment generates, uses and can radiate radio frequency energy and, if not installed and used in accordance with the instructions, may cause harmful interference to radio communications. However, there is no guarantee that interference will not occur in a particular installation. If this equipment does cause harmful interference to radio or television reception, which can be determined by turning the equipment off and on, the user is encouraged to try to correct the interference by one or more of the following measures:

—Reorient or relocate the receiving antenna.
—Increase the separation between the equipment and receiver.
—Connect the equipment into an outlet on a circuit different from that to which the receiver is connected.
—Consult the dealer or an experienced radio/TV technician for help.

This equipment complies with FCC radiation exposure limits set forth for an uncontrolled environment. This equipment should be installed and operated with minimum distance 20cm between the radiator& your body.