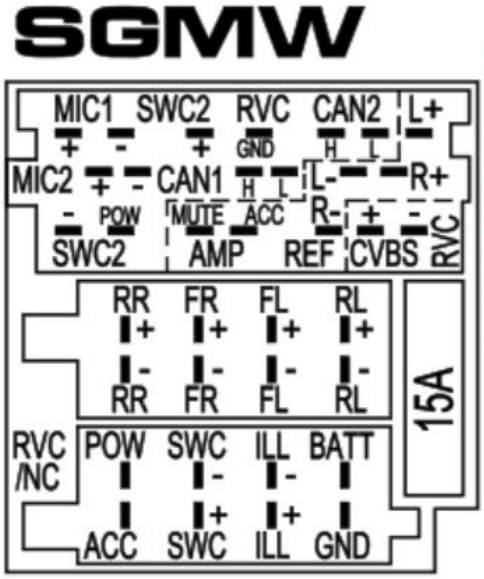

Product Name: Non-connected Voice Communication System Assembly

Product Model: MP-202S-01

Power Input: DC12V ⎓ 2.5A

FCC ID: 2AVYX-MP202S01

This device complies with Part 15 of the FCC Rules. Operation is subject to the following two conditions: (1) this device may not cause harmful interference, and (2) this device must accept any interference received, including interference that may cause undesired operation.

Label Location