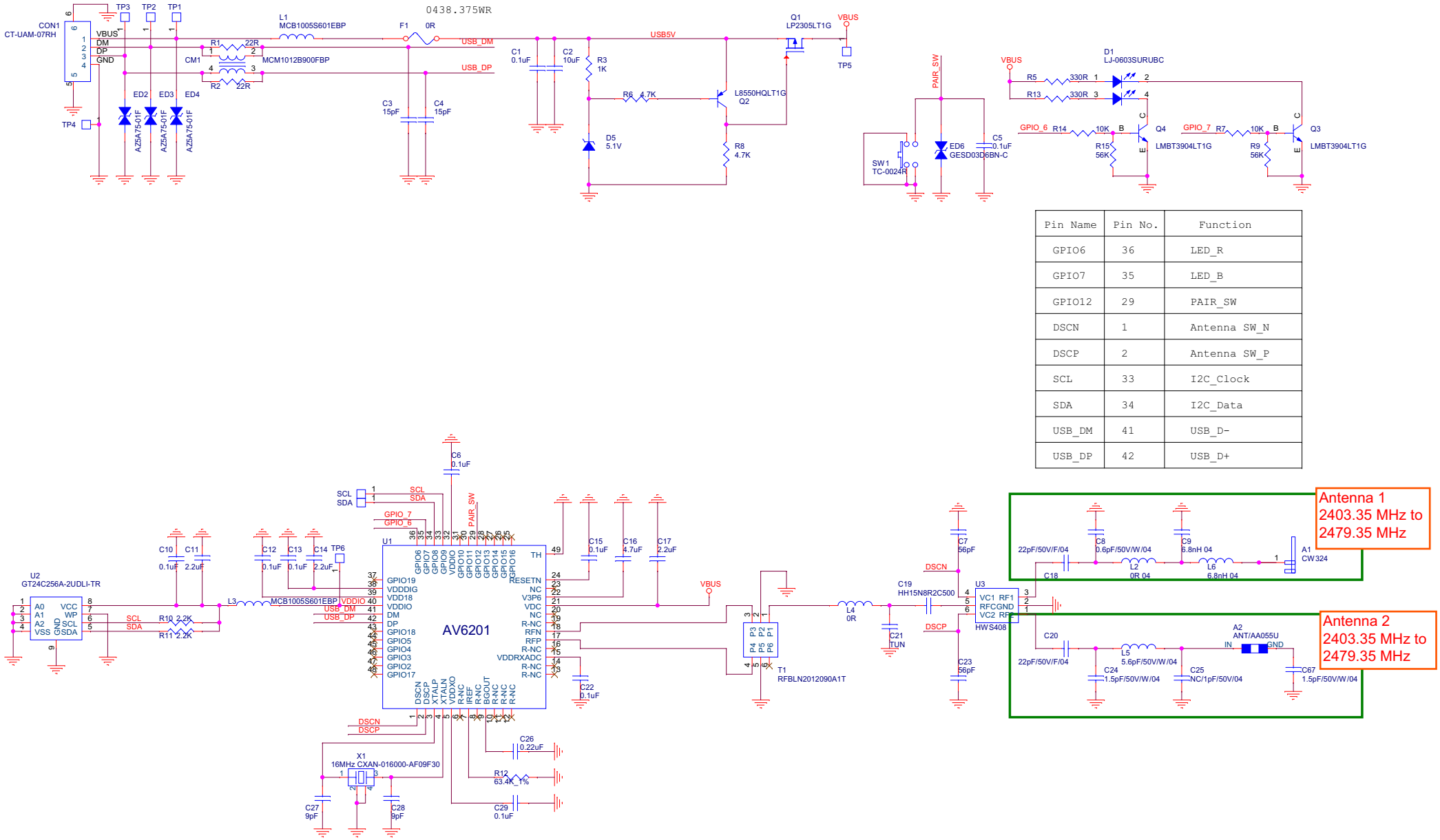

Pin Name	Pin No.	Function
GPIO6	36	LED_R
GPIO7	35	LED_B
GPIO12	29	PAIR_SW
DSCN	1	Antenna SW_N
DSCP	2	Antenna SW_P
SCL	33	I2C_Clock
SDA	34	I2C_Data
USB_DM	41	USB_D-
USB_DP	42	USB_D+

Approved by	Checked by	Designer	AMPACS CORPORATION	
Eddie	Carl	Boyce	Project Number RIG-800P_TX	AMPACS CORPORATION
			Size C / Title AV6201	Rev A
			Date: Tuesday, May 25, 2021	Sheet 4 of 4