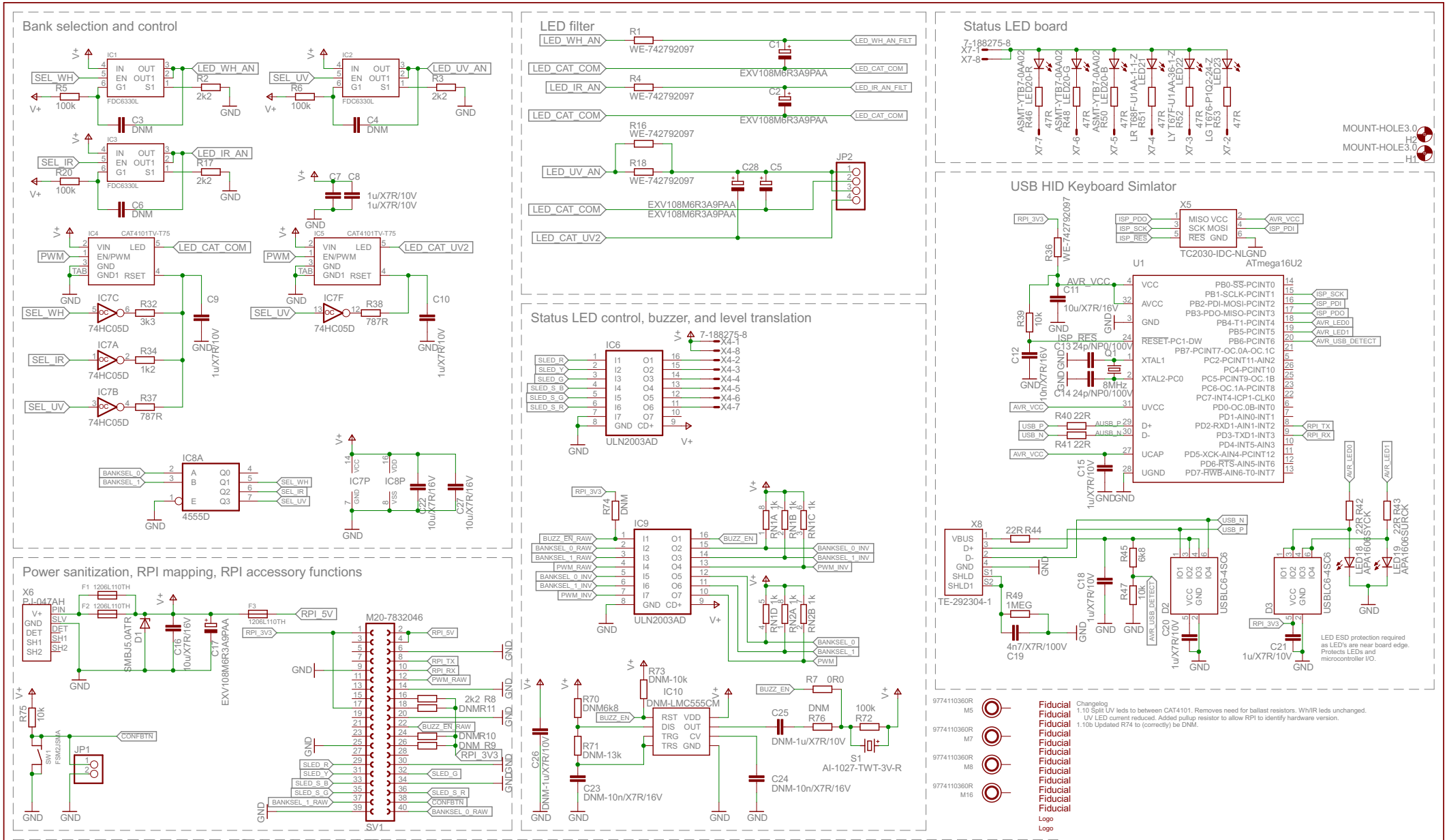
Bank selection and control
LED filter
Status LED board
USB HID Keyboard Simlator
Status LED control, buzzer, and level translation
Power sanitization, RPI mapping, RPI accessory functions
Unused components
On-board exposure LEDs
Changelog
1.10 Split UV leds to between CAT4101. Removes need for ballast resistors. Wh/IR leds unchanged.
UV LED current reduced. Added pullup resistor to allow RPI to identify hardware version.
1.10b Updated R74 to (correctly) be DNM.
Ballast resistors for Wh/IR LEDs for ~1V over CAT4101
Use one Littelfuse 60R075 per UV LED to add overheat protection to UV LEDs.
Use TE Connectivity 1483352-1 to connect status LED board
Maximum output current of 750mA cont. for UV leds. Currently set to ~680mA.
AVR status LEDs must have a VF > 1.8V
Use GST18E05-P1J Mean Well power supply
TITLE: led_board_1.10b
Document Number:
REV:
Date: 7/20/2018 11:35:03 AM
Sheet: 1/1