ann arbor charlottesville santa clara

Proposed ID Label and Location

Proposed ID Label:

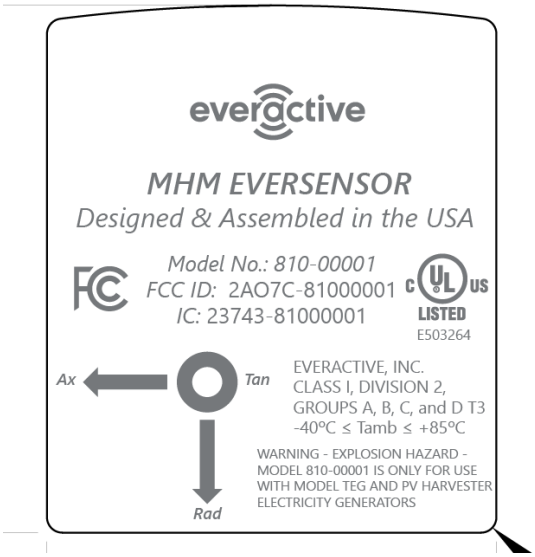

Proposed Location Hardware

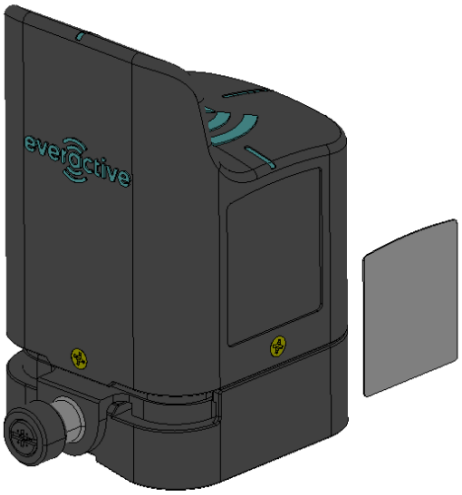

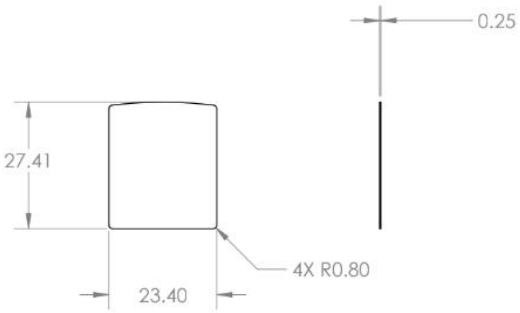

2348 Walsh Avenue
Santa Clara, CA 95051
contact@everactive.com
www.everactive.com