Antenna Information (SRD)					
Technology	Brand	Gain (dBi)	Model	Freq. Range	Antenna Type
NFC	Toast Inc.	N/A	Toast Go ant	13.56	Loop

NFC CABLE

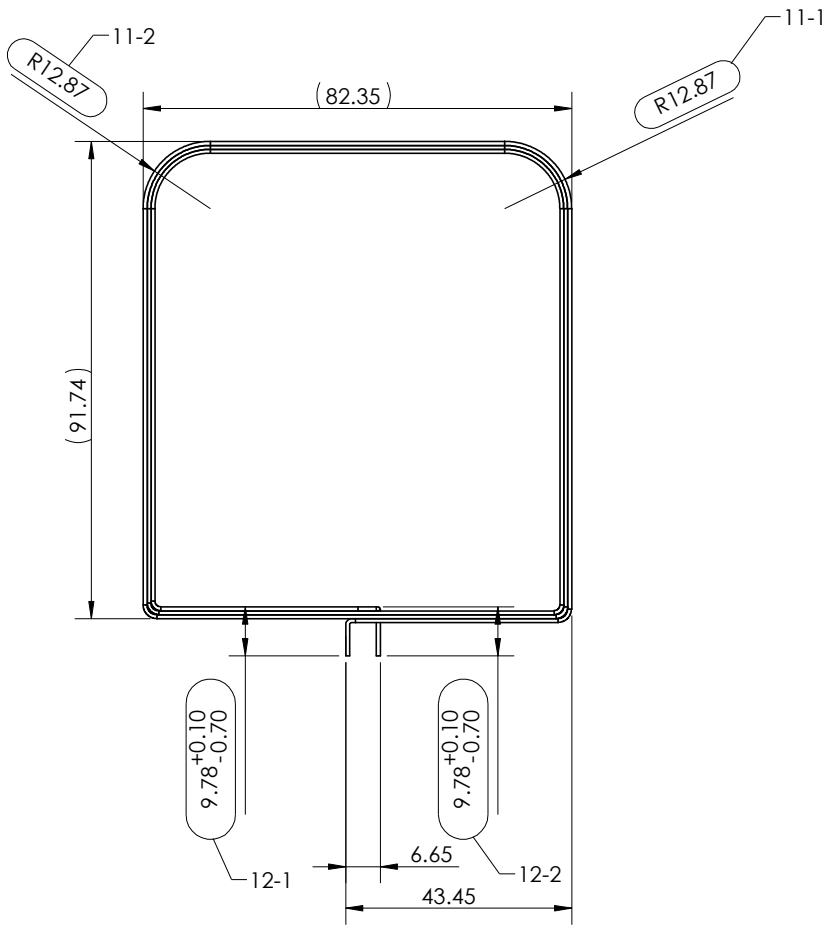

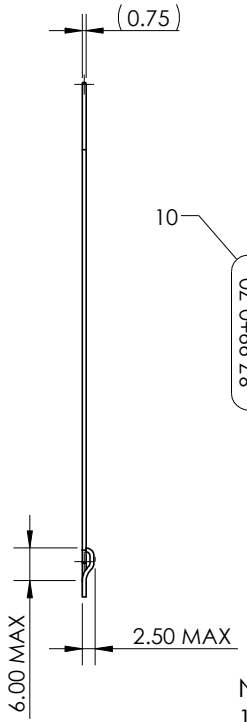

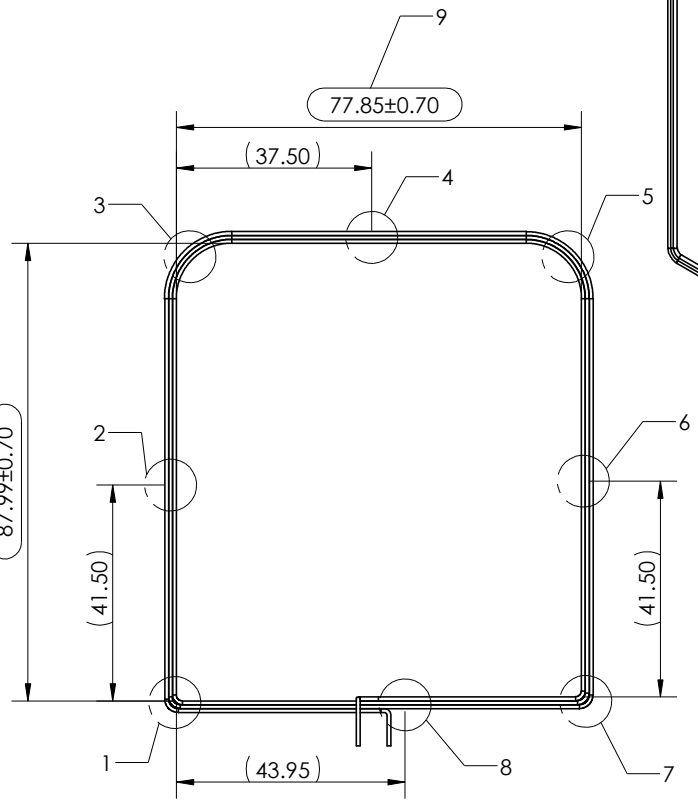

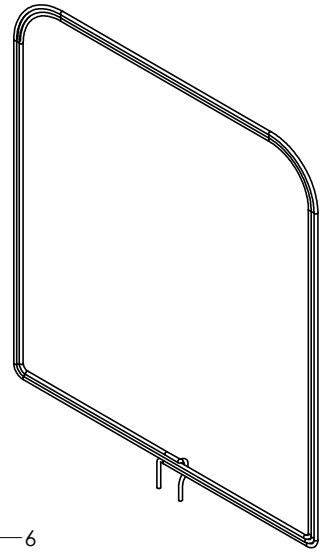

NOTE:

1. THICKNESS DIMENSIONS RANGE FOR DIFFERENT POSITIONS OF CABLE:
   1.0mm MAXIMUM FOR POSITIONS 2, 6 AND 8.
   1.2mm MAXIMUM FOR POSITION 1, 3, 4, 5, AND 7.

2. THE DIMENSIONS MARKED FOR BALL NUMBERS 1 TO 12 MUST BE MEASURED AND CONTROLLED WITHIN THE SPECIFIED TOLERANCE RANGE.

3. THAT IS ACCEPTABLE FOR MEASURING WITH A CALIPER.

►MUST BE READ IN CONJUNCTION WITH MAIN SHEET◄
SEE MAIN SHEET FOR TOLERANCES, UNITS, PROJECTION, COLOR, MATERIAL, FINISH, AND APPROVALS.

TITLE

TOLERANCES UNLESS SPECIFIED
0~10mm : +/- 0.25
10~40mm : +/- 0.35
40~80mm : +/- 0.5

INSPECTION DIMENSIONS
DESIGNATOR:
QUANTITY:

toast

SIZE	DRAWING NUMBER	REVISION
B		

AUTHOR		ENG APPR		DO NOT SCALE DRAWING
ROHS COMPLY	MASS g	VOL cm³	SCALE 1:1	SHEET 2 OF 3

v1.1

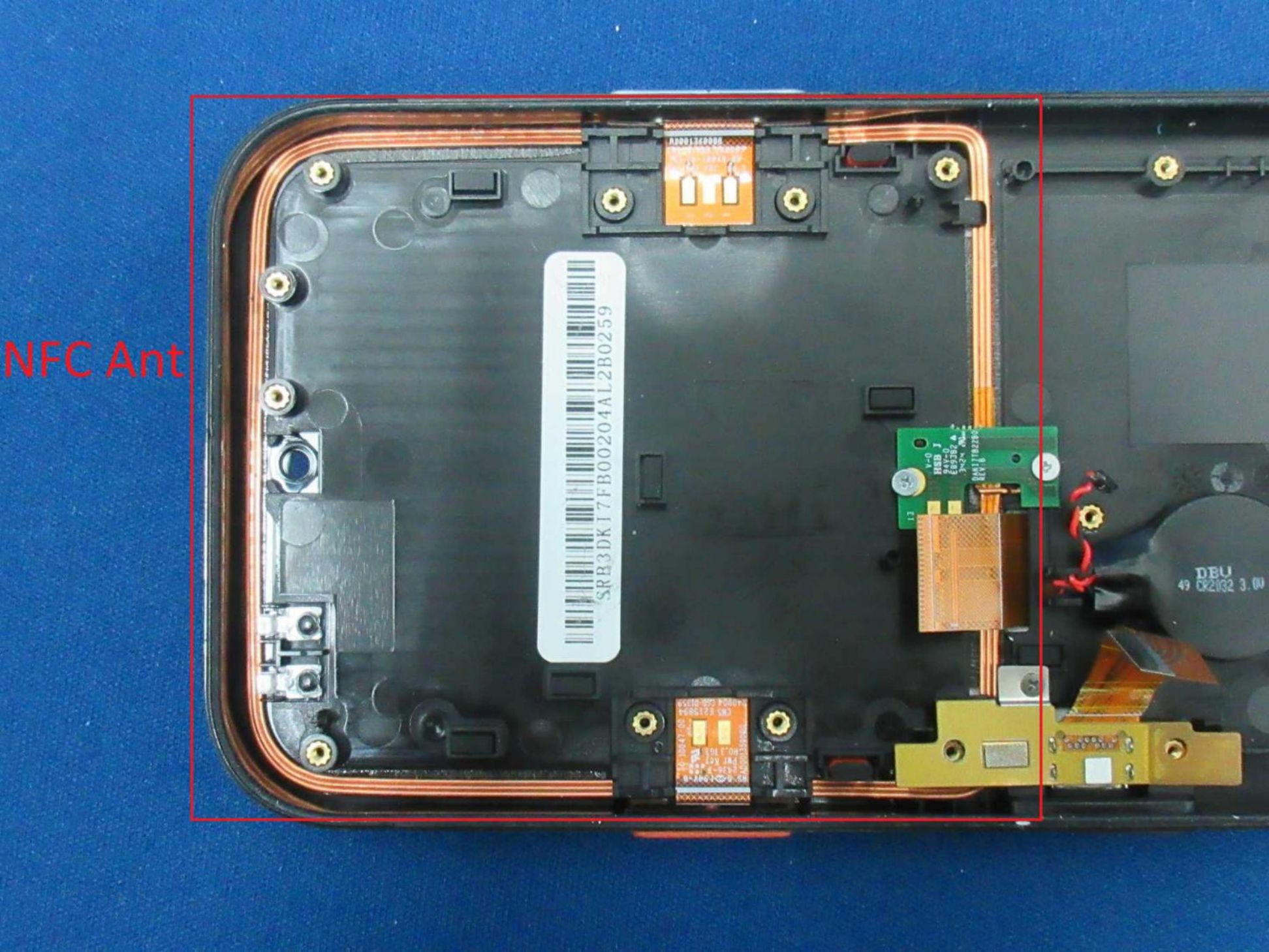
NFC Ant
SRB3DK17FB00204AL2B0259