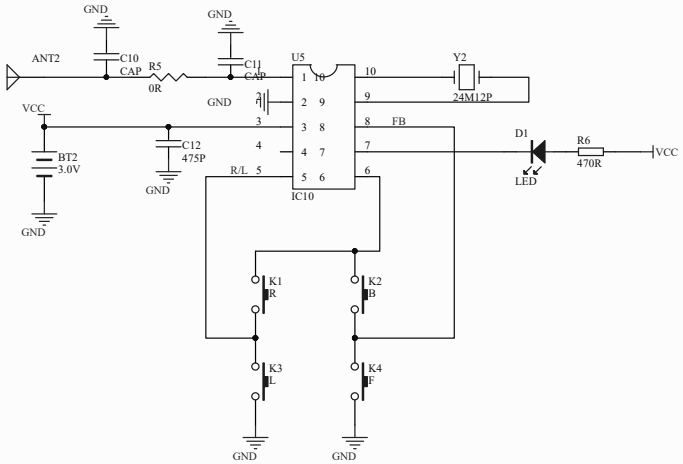

Title	YY-DT1:16TX原理图		
Size A4	Number		Revision
Date: 2025/2/16		Sheet of	
File: D:\E\yan\柏达\1比16\YY-DT1比16TX原理图.SchDoc			