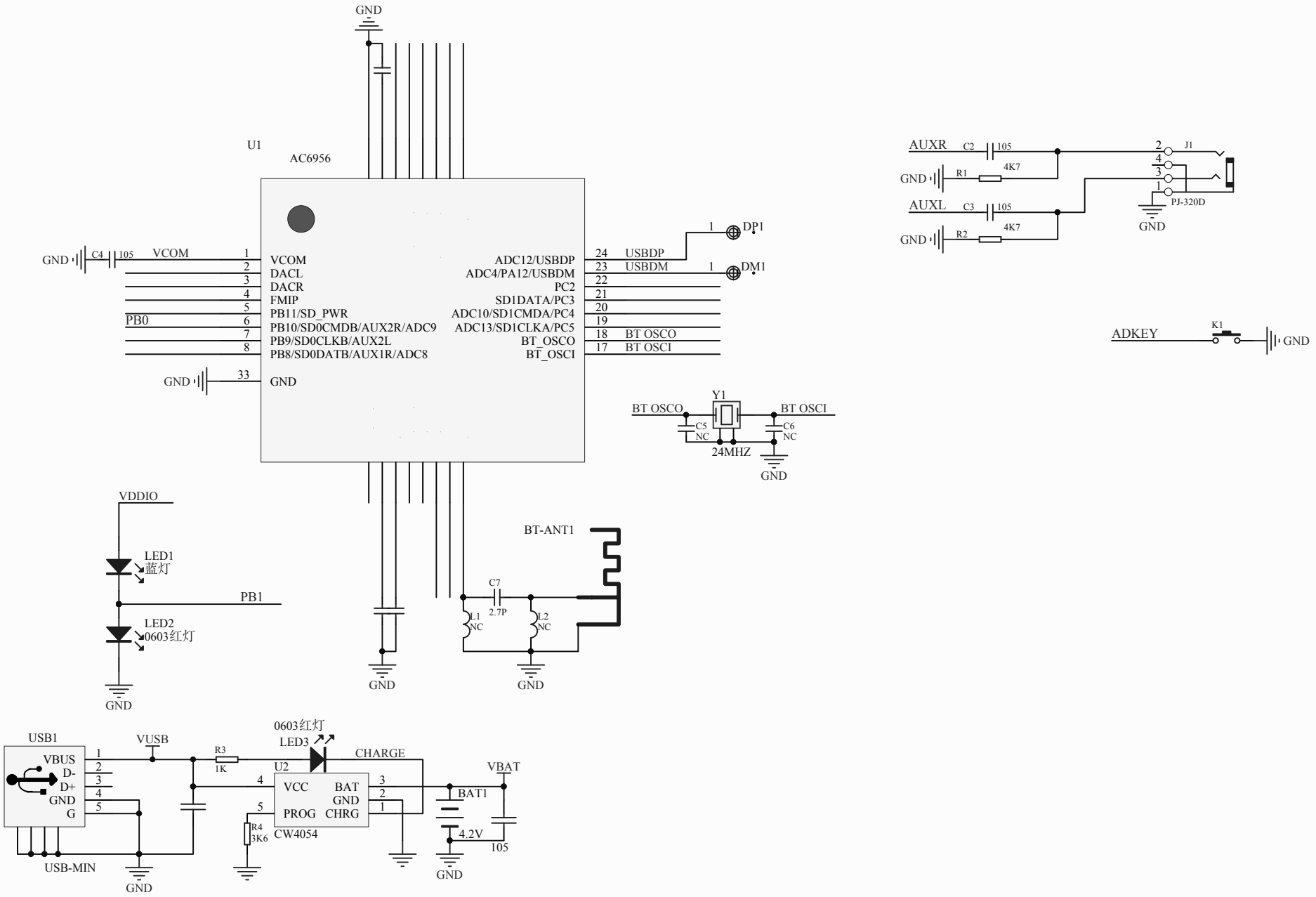
GND
U1
AC6956
GND
C4
105
VCOM
PB0
1 VCOM
2 DACL
3 DACR
4 FMIP
5 PB11/SD_PWR
6 PB10/SD0CMDB/AUX2R/ADC9
7 PB9/SD0CLKB/AUX2L
8 PB8/SD0DATB/AUX1R/ADC8
GND 33 GND
24 USBDP
23 USBDM
22
21
20
19
18 BT OSCO
17 BT OSCI
ADC12/USBDP
ADC4/PA12/USBDM
PC2
SD1DATA/PC3
ADC10/SD1CMDA/PC4
ADC13/SD1CLKA/PC5
BT_OSCO
BT_OSCI
1 DP1
1 DM1
AUXR
C2
105
R1
4K7
GND
AUXL
C3
105
R2
4K7
GND
J1
PJ-320D
GND
ADKEY
K1
GND
BT OSCO
Y1
BT OSCI
C5
NC
C6
NC
24MHZ
GND
VDDIO
LED1
蓝灯
PB1
LED2
0603红灯
GND
BT-ANT1
C7
2.7P
L1
NC
L2
NC
GND
GND
USB1
VBUS
D-
D+
GND
G
USB-MIN
GND
VUSB
R3
1K
0603红灯
LED3
CHARGE
U2
VCC
BAT
GND
PROG
CHRG
CW4054
R4
3K6
VBAT
BAT1
4.2V
105
GND