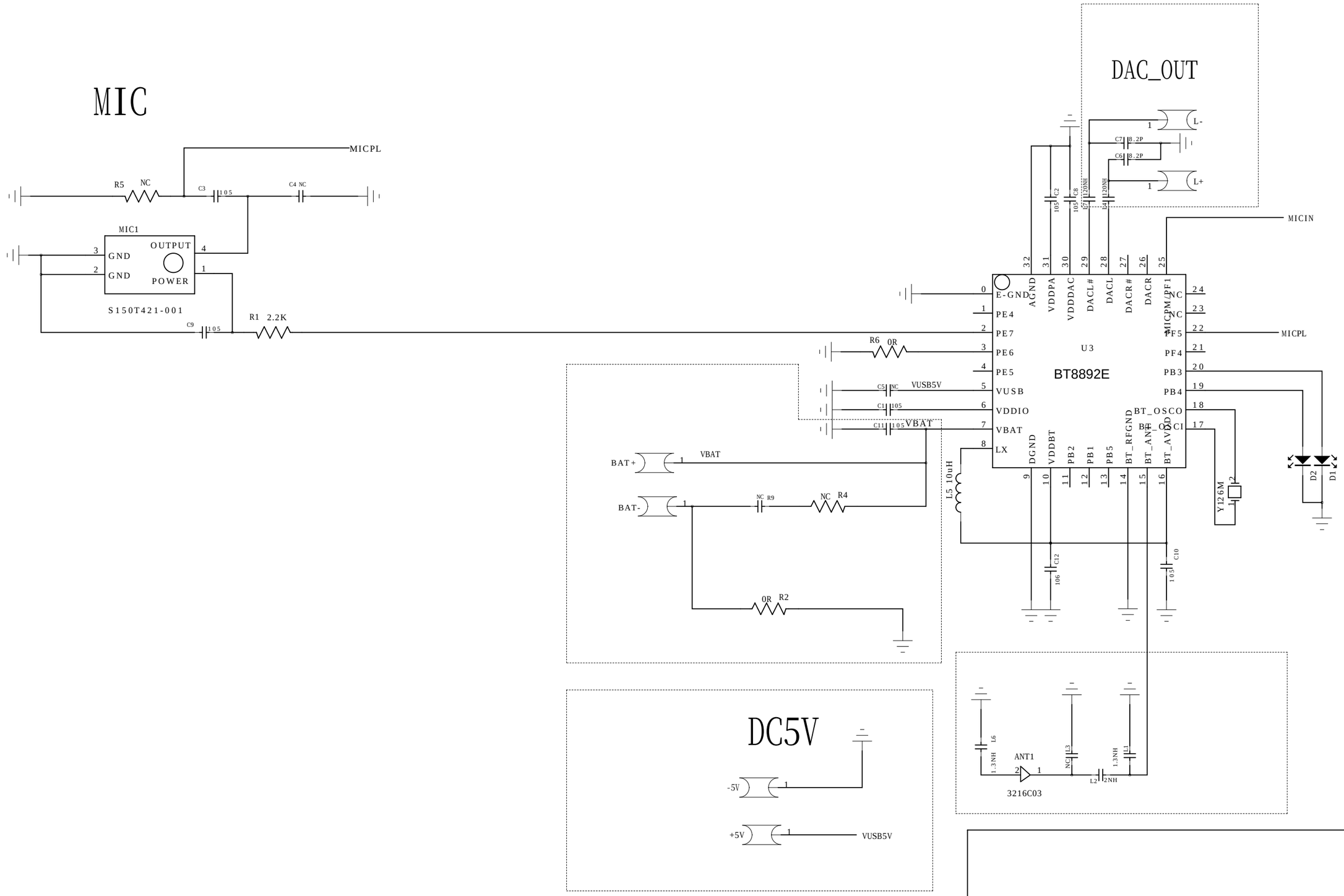

TITLE:	YS-2108-V1.0		
DRAWM:		DATED:	2021-07-6