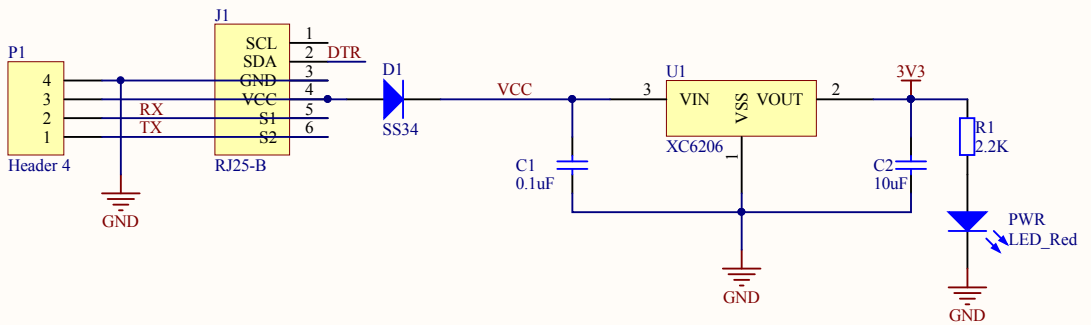


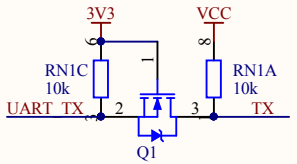


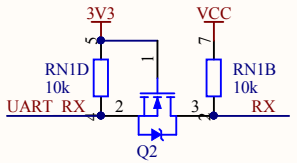


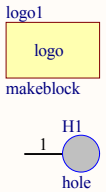


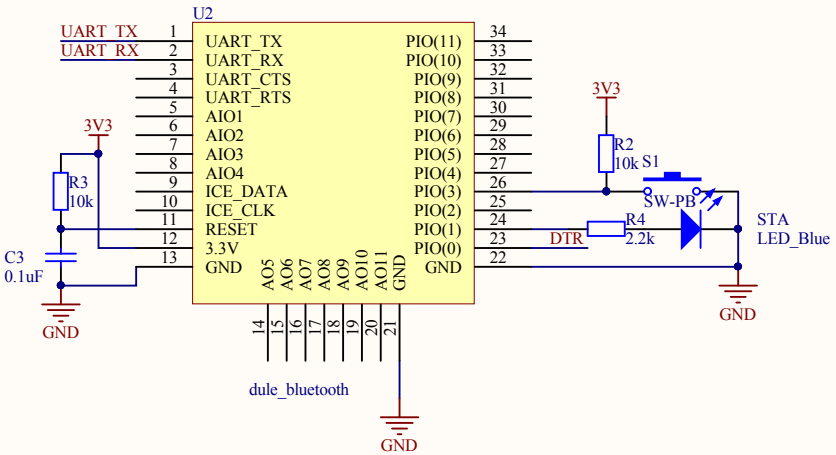


Title: Me Bluetooth Module(Dual Mode)

Date: 2014/6/27 Time: 12:23:51

Makeblock
www.makeblock.cc